ABBREVIATIONS

ABV	ABOVE	HW	HOT WATER
ADJ	ADJUSTABLE	HWR	HOT WATER RETURN
AF	AIRFOIL	HWS	HOT WATER SUPPLY
AFF	ABOVE FINISHED FLOOR	HVAC	HEATING VENTILATION AND AIR CONDITIONING
AHU	AIR HANDLING UNIT	HV	HEATING AND VENTILATING
AP	ACCESS PANEL	IN WG	INCHES WATER GAUGE
BAS	BUILDING AUTOMATION SYSTEM	KW	KILOWATTS
BI	BACKWARD INCLINE	LAT	LEAVING AIR TEMPERATURE
BLDG	BUILDING	LWT	LEAVING WATER TEMPERATURE
BHP	BRAKE HORSEPOWER	MA	MAKE-UP AIR
BTUH	BRITISH THERMAL UNIT PER HOUR	MAX	MAXIMUM
BDD	BACKDRAFT DAMPER	MBH	1,000 X BTUH
CD	CONDENSATE DRAIN	MIN	MINIMUM
CFM	CUBIC FEET PER MINUTE	MD	MANUAL VOLUME DAMPER
CLG	CEILING	M	MOTORIZED DAMPER
CHW	CHILLED WATER	MZ	MULTI-ZONE
CHWR	CHILLED WATER RETURN	NTS	NOT TO SCALE
CHWS	CHILLED WATER SUPPLY	OA	OUTSIDE AIR
CWR	CONDENSER WATER RETURN	OBMVD	OPPOSED BLADE MANUAL VOLUME DAMPER
CWS	CONDENSER WATER SUPPLY	PROP	PROPELLER
CONC	CONCRETE	PCR	PRE-CONDITIONED AIR SYSTEM RETURN WATER
CONT	CONTINUOUS	PD	PRESSURE DROP
CO	CARBON MONOXIDE	PLBG	PLUMBING
CO_2	CARBON DIOXIDE	PSIA	POUNDS PER SQUARE INCH ABSOLUTE
CU	CONDENSING UNIT	PSIG	POUNDS PER SQUARE INCH GAUGE
DB	DRYBULB	R	REFRIGERANT PIPING
DWGS	DRAWINGS	RA	RETURN AIR
DX	DIRECT EXPANSION	RD	RADIATION DAMPER
EF	EXHAUST FAN	REG	REGISTER
EXH	EXHAUST	REQ'D	REQUIRED
EA	EACH	RH	RELATIVE HUMIDITY
EAT	ENTERING AIR TEMPERATURE	RPM	REVOLUTIONS PER MINUTE
EER	ENERGY EFFICIENCY RATIO	RTU	ROOFTOP UNIT
ELECT	ELECTRICAL	SA	SUPPLY AIR
ENT	ENTERING	SEER2	SEASONAL ENERGY EFFICIENCY RATIO 2
EQ	EQUAL	SF	SQUARE FOOT
EWT	ENTERING WATER TEMPERATURE	SD	SMOKE DETECTOR
FC	FORWARD CURVED	SDMP	SMOKE DAMPER
FCU	FAN COIL UNIT	SR	SUPPLY REGISTER
FD	FIRE DAMPER	STR	STARTER
FL	FLOOR	SZ	SINGLE ZONE
FLEX	FLEXIBLE CONNECTOR OR DUCT	T	THERMOSTAT
FPM	FEET PER MINUTE	TEFC	TOTALLY ENCLOSED FAN COOLED
F/S	COMBINATION FIRE AND SMOKE DAMPER	TEMP	TEMPERATURE
FT H_2O	FEET WATER GAUGE	T/O	TRANSFER OPENING ABOVE CEILING
F	DEGREES FAHRENHEIT	TS	TEMPERATURE SENSOR
GA	GAUGE	TYP	TYPICAL
GAL	GALLON	VFD	VARIABLE FREQUENCY DRIVE
GALV	GALVANIZED	VAV	VARIABLE AIR VOLUME
GPM	GALLONS PER MINUTE	VS	VARIABLE SPEED
H	HUMIDISTAT	W	WATTS
HP	HORSEPOWER	W/	WITH
HTWR	HIGH TEMPERATURE HOT WATER RETURN	W/O	WITHOUT
HTWS	HIGH TEMPERATURE HOT WATER SUPPLY	WB	WETBULB
		ZD	ZONE DAMPER

ENERGY CALC VALUES

ROOF:	R-38
WALLS:	R-7.6
WINDOWS:	
SHGC:	N/A
U-VALUE:	N/A
VLT:	N/A
DOORS:	R-0.09
FLOORS:	R-N/A

INSULATION VALUES

MATERIAL	R-VALUE (≤ 3 STORY)	R-VALUE (≥ 4 STORY)
DUCTWORK (WITHIN BUILDING ENVELOPE)	R-4.2	R-6
DUCTWORK (WITHIN ATTIC)	R-6	R-8

NOTE:
THIS PROJECT HAS MET THE MINIMUM ENERGY CODE REQUIREMENTS AND HAS BEEN DESIGNED TO THE MINIMUM VALUES NOTED. ALL MATERIALS USED IN THE CONSTRUCTION OF THIS PROJECT MUST MEET OR EXCEED THE MINIMUM VALUES NOTED PER THE LATEST ADOPTED EDITION OF THE FLORIDA BUILDING CODE AND FLORIDA ENERGY CODE.

GENERAL NOTES

1. INSTALL EQUIPMENT AND MATERIALS IN COMPLIANCE WITH MANUFACTURER'S MINIMUM CLEARANCE REQUIREMENTS AND RECOMMENDATIONS.
2. COMPLY WITH THE LATEST EDITIONS OF NFPA AND THE 8TH EDITION OF THE 2023 FLORIDA BUILDING CODE (MECHANICAL, PLUMBING, GAS, AND ENERGY CONSERVATION).
3. ALL MATERIALS SHALL FIT THE SPACE AVAILABLE. VERIFY DIMENSIONS AND CLEARANCES ON BUILDING PLANS PRIOR TO COMMENCING WORK.
4. AN INDEPENDENT TEST AND BALANCE CONTRACTOR (TABC) SHALL BE HIRED BY THE GENERAL CONTRACTOR.
5. TABC IS RESPONSIBLE FOR TESTING AND BALANCING OF AIR SYSTEMS IN ACCORDANCE WITH AABC GUIDELINES. A TEST AND BALANCE REPORT SHALL BE SUBMITTED TO THE ARCHITECT FOR APPROVAL.
6. PROVIDE 45 DEGREE BRANCH TAKE-OFF PER SMACNA FIG. 2-8 ON ALL RECTANGULAR DUCT TAKE-OFFS.
7. ALL DUCTWORK TAKE-OFFS AND/OR BRANCH DUCTWORK SHALL BE PROVIDED WITH BALANCING DAMPERS (REMOTE IF IN HARD CEILING AREAS).
8. CONTRACT SHALL MAINTAIN ALL RATED FIRE, SMOKE AND MEMBRANE ASSEMBLIES (EVEN IF NOT NOTED ON PLANS). PROVIDE AND INSTALL FIRE/SMOKE/RADIATION DAMPERS AT ALL RATED PENETRATIONS AND PROVIDE DUCT MOUNTED HINGED ACCESS DOORS. THIS APPLIES FOR ALL FIRE/SMOKE/RADIATION DAMPERS.
9. CONTRACTOR SHALL COORDINATE VOLTAGE AND PHASE OF EACH PIECE OF EQUIPMENT WITH THE ELECTRICAL CONTRACTOR PRIOR TO ORDERING AND SHALL COORDINATE WITH ALL OTHER TRADES PRIOR TO OR INSTALLING EQUIPMENT AND MATERIALS.
10. COORDINATE ALL HVAC SYSTEM DRAWINGS WITH EXISTING/NEW TRUSS TO AVOID INTERFERENCE BETWEEN MECHANICAL SYSTEMS AND ROOF STRUCTURE. CONTRACTOR SHALL BE RESPONSIBLE FOR ALL COSTS ASSOCIATED WITH TRUSS INTERFERENCE THAT OCCURS IN THE FIELD DURING CONSTRUCTION. COORDINATE IN ADVANCE. DUCT SIZES MAY BE REVISED TO FIT TRUSS SYSTEM SO LONG AS THE EQUIVALENT INSIDE CROSS SECTIONAL AREA IS NOT DECREASED.
11. GAUGES AND CONSTRUCTION FOR DUCTWORK SHALL CONFORM TO THE LATEST EDITION OF SMACNA'S HVAC DUCT CONSTRUCTION STANDARDS.
12. TRANSITION RECTANGULAR DUCTWORK ON BOTTOM AND SIDES. MAINTAIN TOP OF DUCTWORK LEVEL AND HIGH AS POSSIBLE. FLEXIBLE DUCT RUN-OUTS TO CEILING DIFFUSERS SHALL BE AS STRAIGHT AS POSSIBLE AND FREE OF SAGS AND KINKS. FLEX DUCT SHALL BE THE SAME SIZE AS THE DIFFUSER NECK IT SERVES.
13. ALL DUCT TRANSITIONS FROM SQUARE TO ROUND SHALL BE SMOOTH SQUARE TO ROUND TRANSITIONS. SPIN-IN FITTINGS AT THE END OF CAPPED DUCTS ARE NOT ACCEPTABLE. DUCT DIMENSIONS SHOWN ARE INSIDE CLEAR DIMENSIONS.
14. THE CONTRACTOR SHALL FULFILL ALL REQUIREMENTS OF THE CONTRACT DOCUMENTS AND SHALL COMPLETE THE WORK SHOWN ON THESE DRAWINGS. ALL SYSTEMS SHALL BE FINISHED, TESTED AND BALANCED, ADJUSTED, AND PROVEN TO BE FULLY OPERATIONAL AND USEABLE.
15. ADJUST ALL DIFFUSERS IN CORRIDORS OR WITHIN THREE (3) FEET OF A WALL TO PROVIDE 2-WAY OR 3-WAY BLOW AWAY FROM OR PARALLEL TO WALLS. ALL DIFFUSERS SHALL HAVE 4-WAY BLOW UNLESS NOTED OTHERWISE.
16. PORTIONS OF DUCTWORK VISIBLE THROUGH GRILLES AND REGISTERS IN FINISHED AREAS SHALL BE PAINTED FLAT BLACK.
17. ALL DAMPERS IN AND ABOVE CEILING SHALL BE ACCESSIBLE. CONTRACTOR SHALL COORDINATE ALL ACCESS PANELS IN CEILINGS OR WALLS WITH ARCHITECTURAL REFLECTED CEILING PLANS AND INTERIOR DRAWINGS FOR PROPER LOCATION. REMOTE DAMPERS CAN BE INSTALLED ON AIR DEVICES LOCATED WITHIN HARD CEILINGS.
18. MOUNT THERMOSTATS WHERE INDICATED ON PLANS 4'-0" ABOVE FINISHED FLOOR UNLESS NOTED OTHERWISE. IN HANDICAPPED ACCESSIBLE AREAS, MOUNT CONTROLS AT 4'-0" (MAXIMUM) ABOVE FINISHED FLOOR.
19. COORDINATE DUCTWORK AND PIPING WITH PLUMBING, FIRE PROTECTION AND ELECTRICAL. MAKE OFFSETS AND TRANSITIONS TO COORDINATE WITH OTHER TRADES WITHOUT ANY ADDITIONAL EXPENSE TO THE CONTRACT.
20. SEAL ALL TRANSVERSE JOINTS AND FITTINGS WITH DUCT SEALER.
21. TRAP AND ROUTE CONDENSATE DRAINS LINES, FULL SIZE OF UNIT CONNECTION, AS INDICATED. SLOPE 1/8" PER FOOT.
22. ALTERNATE MANUFACTURERS AND MODELS WILL BE REVIEWED. THERE MAY BE ARCHITECTURAL, STRUCTURAL AND ELECTRICAL CHANGES RESULTING FROM THE ALTERNATES. THE COST OF IMPLEMENTING AND ENGINEERING THESE CHANGES SHALL BE BORNE BY THE MECHANICAL SUBCONTRACTOR.
23. PIPE AND DUCT ROUTING SHOWN IS SCHEMATIC. PROVIDE ANY ADDITIONAL OFFSETS AND FITTINGS, INCLUDING DIVIDED DUCTS, REQUIRED FOR PROPER INSTALLATION AND TO MAINTAIN CLEARANCES AS ENCOUNTERED IN THE FIELD.
24. COORDINATE CEILING MOUNTED AIR DEVICE LOCATION WITH REFLECTED CEILING PLAN AND OTHER TRADES.
25. ALL CONTROL WIRING AND CONDUIT SHALL COMPLY WITH NEC DIVISION 16 SPECIFICATIONS.
26. PROVIDE MATERIALS WHICH HAVE A FLAME SPREAD RATING OF 25 OR LESS AND A SMOKE DEVELOPED RATING OF 50 OR LESS WHEN TESTED IN ACCORD WITH ASTM E84.
27. SLEEVE AND FIRE STOP PENETRATIONS THROUGH FIRE RATED SYSTEMS TO MAINTAIN RATING OF SYSTEM. USE MINIMUM GALVANIZED STEEL GAUGE DUCT AS REQUIRED TO MAINTAIN RATING OF SYSTEM.
28. WHERE DRYER EXHAUST DUCT IS CONCEALED WITHIN THE BUILDING CONSTRUCTION, IF THE EQUIVALENT LENGTH OF THE DUCT IS MORE THAN 35'-0" IT SHALL BE IDENTIFIED ON A PERMANENT LABEL OR TAG. THE LABEL OR TAG SHALL BE LOCATED WITHIN 6 FEET OF THE EXHAUST DUCT CONNECTION.
29. CONTRACTOR TO ORDER ALL FIRE/SMOKE DAMPERS WITH INTEGRAL SMOKE DETECTORS AND END STOP INDICATOR OPTIONS. VERIFY VOLTAGE WITH ELECTRICAL DRAWINGS. IF BUILDING IS EQUIPPED WITH FIRE ALARM SYSTEM ALL FIRE/SMOKE DAMPERS WILL BE CONNECTED TO BUILDING FIRE ALARM SYSTEM.
30. ALL MECHANICAL EQUIPMENT SHALL BE THOROUGHLY CLEANED OF ALL DIRT, OIL, CONCRETE, ETC. ANY DENTS, SCRATCHES OR OTHER VISIBLE BLEMISHES SHALL BE CORRECTED AND THE APPEARANCE OF THE EQUIPMENT MADE "LIKE NEW" AND TO THE SATISFACTION OF THE ARCHITECT/ENGINEER. UPON COMPLETION, AND BEFORE FINAL ACCEPTANCE OF THE WORK, ALL DEBRIS, RUBBISH, LEFTOVER MATERIALS, TOOLS AND EQUIPMENT SHALL BE REMOVED FROM THE SITE. PROTECTION OF WORK UNTIL FINAL ACCEPTANCE: PROTECT ALL MATERIALS AND EQUIPMENT FROM DAMAGE, ENTRANCE OF DIRT AND CONSTRUCTION DEBRIS FROM THE TIME OF INSTALLATION UNTIL FINAL ACCEPTANCE. ANY MATERIALS AND EQUIPMENT WHICH ARE DAMAGED SHALL BE REPAIRED TO "AS NEW" CONDITION OR REPLACED AT THE DIRECTION OF THE ARCHITECT/ENGINEER. WHERE FACTORY FINISHES OCCUR AND DAMAGE IS MINOR, FINISHES MAY BE TOUCHED UP. IF, IN THE OPINION OF THE ARCHITECT/ENGINEER THE DAMAGE IS EXCESSIVE, FACTORY FINISH SHALL BE REPLACED TO "NEW" CONDITION.
31. DRAWINGS ARE DIAGRAMMATIC AND INDICATE THE GENERAL ARRANGEMENT AND EXTENT OF WORK. EXACT LOCATIONS AND ARRANGEMENT OF MATERIALS AND EQUIPMENT SHALL BE DETERMINED, WITH THE ACCEPTANCE OF THE ARCHITECT/ENGINEER, AS WORK PROGRESSES TO CONFORM IN THE BEST POSSIBLE MANNER WITH THE SURROUNDINGS AND WITH THE ADJOINING WORK OF OTHER TRADES. WHERE LOCATIONS OF EQUIPMENT, DEVICES OR FIXTURES ARE CONTROLLED BY ARCHITECTURAL FEATURES, ESTABLISH SUCH LOCATIONS BY REFERRING TO DIMENSIONS ON ARCHITECTURAL DRAWINGS AND NOT BY SCALING DRAWINGS.
32. IN CASE OF DIFFERENCES BETWEEN DRAWINGS AND SPECIFICATIONS, OR WHERE DRAWINGS AND SPECIFICATIONS ARE NOT CLEAR OR DEFINITE, THE SUBJECT SHALL BE REFERRED TO ARCHITECT/ENGINEER FOR CLARIFICATION AND INSTRUCTIONS.
33. ANY INTERRUPTION OF EXISTING MECHANICAL AND ELECTRICAL SERVICES SHALL BE COORDINATED IN ADVANCE WITH THE OWNER'S REPRESENTATIVE. THIS INCLUDES, BUT IS NOT LIMITED TO, SERVICES PROVIDING CHILLED WATER, ELECTRICITY, OR OTHER CRITICAL SYSTEMS AS MAY BE PERTINENT TO THIS PARTICULAR PROJECT. SERVICE INTERRUPTION TIMES AND DURATION OF INTERRUPTION OF SERVICES SHALL BE DECIDED BY THE OWNER. PROVIDE APPROPRIATE PROVISIONS (SUCH AS ISOLATION SHUT-OFF VALVES, DAMPERS, END CAPS, AND SIMILAR ITEMS) AS NECESSARY TO ACCOMMODATE THE REQUIRED SERVICE INTERRUPTIONS. IF SHUTDOWNS CANNOT BE ACCOMMODATED, PROVIDE MEANS FOR "WET" TAPPING OR "HOT" TAPPING OF PIPING SYSTEMS.
34. ALL MAIN DUCTWORK SHOWN PER PLAN IS TO BE SHEET METAL. FIBERGLASS DUCT BOARD IS NOT TO BE INSTALLED UNLESS SPECIFICALLY AUTHORIZED BY THE BUILDING LANDLORD, PROJECT OWNER/AGENT AND MECHANICAL ENGINEER OF RECORD.
35. FIRE AND FIRE/SMOKE DAMPERS ARE REQUIRED TO BE UL LISTED AND APPROVED FOR THE ASSEMBLIES LISTED ON THE ARCHITECTURAL DRAWINGS. THESE DAMPERS MUST ALSO BE REVIEWED AND APPROVED BY THE ARCHITECT PRIOR TO ORDERING.
36. TOTAL DEVELOPED LINESET LENGTH, INCLUDING HORIZONTAL AND VERTICAL DISTANCE, TO BE VERIFIED WITH CONDENSING UNIT MANUFACTURER PRIOR TO PURCHASE. IF CONDENSING UNIT LOCATIONS EXCEED THE MANUFACTURER'S RECOMMENDED TOTAL LINESET LENGTH VERIFY THE MANUFACTURER HAS AN OPTION TO ALLOW FOR LONG LINESETS AND PROVIDE ACCESSORIES AS REQUIRED.
37. WHERE REFRIGERANT LINES ARE INSTALLED IN STUDS, JOISTS, RAFTERS OR SIMILAR MEMBER SPACES AND LOCATED LESS THAN 1½" FROM THE NEAREST EDGE OF THE MEMBER THEY MUST BE CONTINUOUSLY PROTECTED BY SHIELD PLATES PER FMC 1101.3.

SYMBOL LEGEND

	SUPPLY DIFFUSER
	RETURN OR OUTDOOR AIR GRILLE
	EXHAUST GRILLE
	LINEAR SLOT DIFFUSER
	SIDEWALL TRANSFER GRILLE
	SIDEWALL SUPPLY REGISTER
	SIDEWALL RETURN GRILLE OR OUTSIDE AIR LOUVER
	SIDEWALL EXHAUST GRILLE
RD	RADIATION DAMPER INSTALLED IN AIR DEVICE
RD	RADIATION DAMPER INSTALLED IN DUCT
	SUPPLY DUCT UP SECTION (RECTANGULAR)
	RETURN DUCT UP SECTION (RECTANGULAR)
	EXHAUST DUCT UP SECTION (RECTANGULAR)
	SUPPLY DUCT DOWN SECTION (RECTANGULAR)
	RETURN DUCT DOWN SECTION (RECTANGULAR)
	EXHAUST DUCT DOWN SECTION (RECTANGULAR)
	SUPPLY DUCT UP SECTION (ROUND)
	SUPPLY DUCT DOWN SECTION (ROUND)
	EXISTING DUCTWORK TO REMAIN (LIGHT LINETYPE)
25ø A/B	RECTANGULAR DUCTWORK WITH TAKE-OFF, BALANCING DAMPER AND INSULATED FLEXIBLE ROUND DUCT. SAME SIZE AS DIFFUSER INLET UNLESS NOTED OTHERWISE. FIRST DIMENSION IS THAT OF SIDE SHOWN
A ø	ROUND DUCTWORK
	CONICAL FITTING WITH DAMPER ON BRANCH CONNECTION TO RECTANGULAR MAIN (PROVIDE DAMPER IN LOW PRESSURE DUCTWORK ONLY)
L=1/FT. MIN. 4" 45° W	RECTANGULAR BRANCH DUCT CONNECTION. (PROVIDE BALANCING DAMPER AT ALL BRANCH CONNECTIONS)
	ELBOW WITH TURNING VANES
	OPPOSED BLADE VOLUME DAMPER (OBD)
	MANUAL DAMPER
	FLEXIBLE DUCT CONNECTION
	FIRE/RADIATION DAMPER WITH ACCESS PANEL
	COMBINATION FIRE/SMOKE DAMPER WITH ACCESS PANEL (PROVIDED BY MECHANICAL, CONNECTED BY ELECTRICAL PROVIDE 120V CIRCUIT AND FIRE ALARM CONNECTION IF APPLICABLE)
	EXISTING DUCTWORK TO BE REMOVED (DASHED LINETYPE)
	DUCT MOUNTED SMOKE DETECTOR PROVIDED AND WIRED BY ELECTRICAL CONTRACTOR AND INSTALLED IN DUCT BY MECHANICAL CONTRACTOR. REFER TO SPECIFICATIONS FOR CONTROL REQUIREMENTS.
	FLEX DUCT
	OPENING IN WALL ABOVE CEILING
TS	WALL MOUNTED TEMPERATURE SENSOR MOUNT 4'-0" ABOVE FINISHED FLOOR
T	WALL MOUNTED THERMOSTAT MOUNT 4'-0" ABOVE FINISHED FLOOR
CO	WALL MOUNTED CO SENSOR MOUNT 4'-0" ABOVE FINISHED FLOOR
H	WALL MOUNTED HUMIDITY SENSOR MOUNT 4'-0" ABOVE FINISHED FLOOR
CO_2	WALL MOUNTED CO_2 SENSOR MOUNT 4'-0" ABOVE FINISHED FLOOR

X	REFERENCE NOTES
AHU 3 (EQUIPMENT TYPE, MARK)	EQUIPMENT TAG
A B	PHOTO DETAIL OR SECTION IDENTIFICATION TARGET A = DETAIL NUMBER B = SHEET NUMBER ON WHICH DETAIL IS LOCATED
A-100	AIR DEVICE TAG MARK-CFM
UC	1" DOOR UNDER CUT. ARROW INDICATES DIRECTION OF FLOW
	FLOW DIRECTION
	INDICATES POINT OF CONNECTION BETWEEN NEW AND EXISTING
	POINT OF DISCONNECT
CWS	CONDENSER WATER SUPPLY PIPING
CWR	CONDENSER WATER RETURN PIPING
BCWS	BUILDING CONDENSER WATER SUPPLY PIPING
BCWR	BUILDING CONDENSER WATER RETURN PIPING
CHWS	CHILLED WATER SUPPLY PIPING
CHWR	CHILLED WATER RETURN PIPING
HWS	HOT WATER SUPPLY PIPING
HWR	HOT WATER RETURN PIPING
CD	CONDENSATE DRAIN PIPING
R	REFRIGERANT PIPING
FS	FLOW SENSOR
SP	STATIC PRESSURE TRANSMITTER ASSEMBLY
	TEE (PLAN, UP, DOWN)
	ELBOW (PLAN, UP, DOWN)
	VALVE
	TWO WAY MOTORIZED CONTROL VALVE
	THREE WAY MOTORIZED CONTROL VALVE
	PRESSURE REDUCING VALVE
	FLOW CONTROL VALVE
	SHUT-OFF VALVE
	BUTTERFLY VALVE
	CHECK VALVE
	STRAINER
	BALANCE VALVE WITH INTEGRAL TAPS FOR CONNECTION OF DIFFERENTIAL PRESSURE METER. VALVE SHALL HAVE NAMEPLATE INDICATING WATER FLOW RATE VERSUS VALVE PRESSURE DROP
A	AUTOMATIC FLOW CONTROL VALVE WITH INTEGRAL TEMPERATURE AND PRESSURE TEST PORTS
	UNION
	VENTURI FLOW METER
	PRESSURE AND/OR TEMPERATURE PORT
	THERMOMETER
	PRESSURE GAUGE WITH GAUGE COCK
	FLEXIBLE CONNECTION
	PRESSURE RELIEF VALVE

NOTE

ABBREVIATIONS, GENERAL NOTES AND SYMBOLS ON THIS MECHANICAL SHEET ARE FOR GENERAL REFERENCE PURPOSES ONLY. ALL OF THESE ABBREVIATIONS, GENERAL NOTES AND SYMBOLS MAY NOT BE USED FOR THIS PROJECT.

THE FALLS AT DRAKE POINT
LAKE COUNTY, FLORIDA

SYMBOL & LEGEND
MECHANICAL

M0.01

© Copyright 2021 ACI, Inc.

GENERAL NOTES:

1. DRAWINGS ARE DIAGRAMMATIC ONLY AND REPRESENT THE GENERAL SCOPE OF THE WORK. PRIOR TO SUBMITTING BID, VISIT THE JOB SITE TO OBSERVE THE SITE CONDITIONS OF THE PROJECT. REVIEW GENERAL NOTES, SPECIFICATIONS AND PLANS FOR ADDITIONAL REQUIREMENTS THAT MAY NOT BE SPECIFICALLY CALLED OUT IN THIS PORTION OF THE CONSTRUCTION DOCUMENTS. NOTIFY ARCHITECT OF ANY CONFLICTS OR DISCREPANCIES PRIOR TO SUBMISSION OF BID.

2. CONDENSING UNIT LOCATIONS ARE SHOWN ON SITE AS REFERENCE ONLY. EXACT CONDENSING UNIT LOCATIONS WILL NEED TO BE COORDINATED WITH CIVIL AND LANDSCAPE DRAWING AND APPROVED BY ARCHITECT PRIOR TO INSTALLATION. CONDENSING UNITS TO BE PLACED IN LOCATIONS WHERE REFRIGERANT LINES WILL NOT EXCEED 75'-0". PROVIDE CONDENSING UNITS WITH HOUSEKEEPING PAD AND ROUTE REFRIGERANT PIPING PER MECHANICAL DETAILS AND RISERS. REFER TO ARCHITECTURAL OR LANDSCAPE DRAWINGS FOR SCREENING IF REQUIRED.

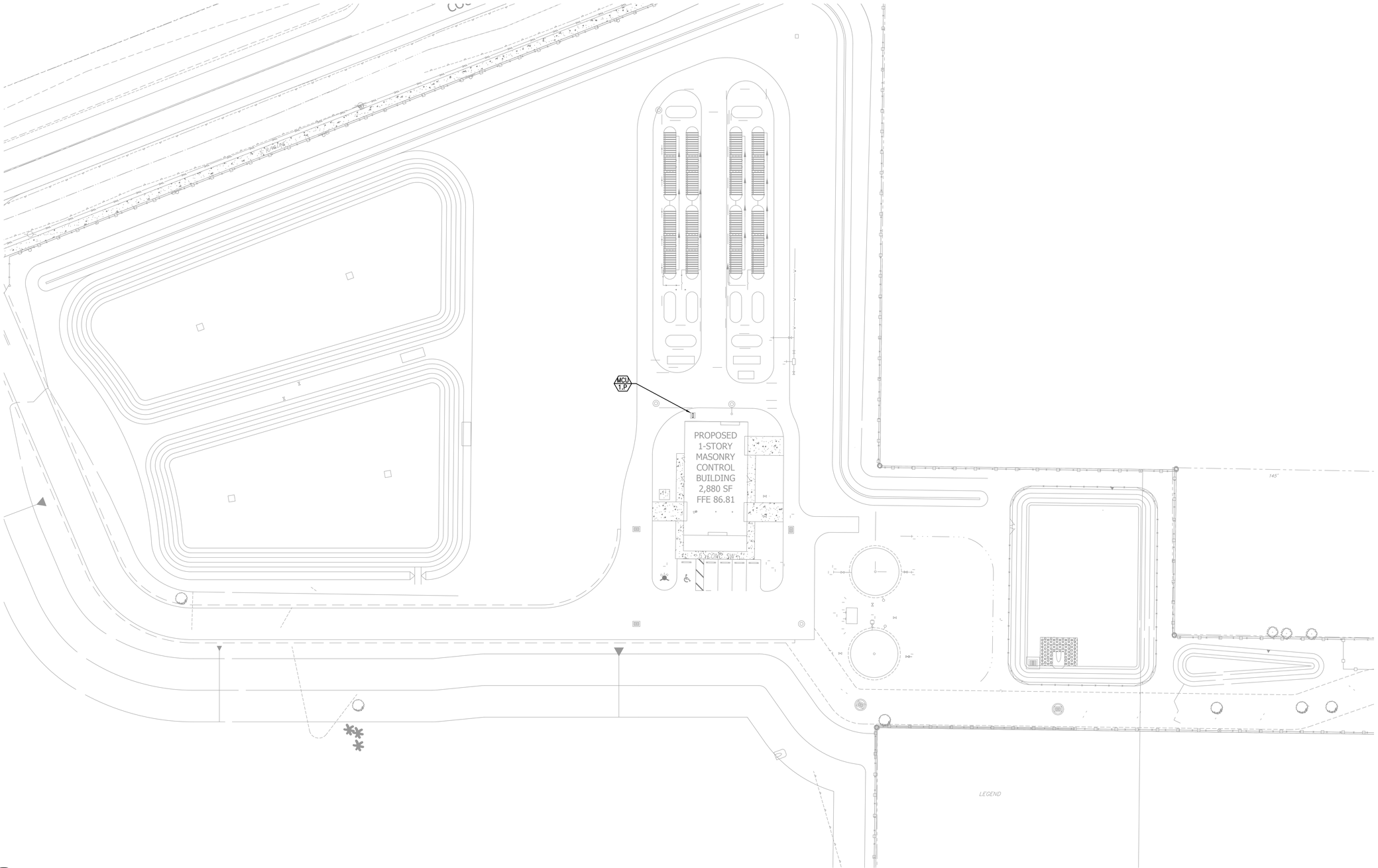

1 WATER TREATMENT BUILDING - SITE PLAN - MECHANICAL

SCALE: 1" = 30'-0"

THE FALLS AT DRAKE POINT
LAKE COUNTY, FLORIDA

SHEET NAME:
WATER TREATMENT BUILDING
SITE PLAN
MECHANICAL

SHEET NUMBER:
M1.02

© Copyright 2021 ACI, Inc.

GENERAL NOTES:

1. THE GENERAL CONTRACTOR IS REQUIRED TO REVIEW AND COORDINATE BETWEEN THE ENGINEERING DRAWINGS AND THE WATER TREATMENT CONTRACTOR DRAWINGS. DISCREPANCIES DISCOVERED BETWEEN THESE ENGINEERING PLANS AND THE WATER TREATMENT CONTRACTOR DESIGNS MUST BE BROUGHT TO THE ATTENTION OF THE ARCHITECT OR ENGINEER IMMEDIATELY FOR RESOLUTION AND DIRECTION PRIOR TO PROCEEDING WITH WORK.

2. NEW HVAC EQUIPMENT IS BEING INSTALLED ON (AND/OR SUSPENDED FROM) THE ROOF DECK OF THIS PROJECT. THE CONTRACTOR IS CAUTIONED THAT IT IS NOT WITHIN THE DESIGN TEAM'S SCOPE OF WORK TO EVALUATE THE CAPACITY OR INTEGRITY OF THE BUILDING'S STRUCTURAL SYSTEMS OR TO DETERMINE IF THE STRUCTURE IS ABLE TO ADEQUATELY SUPPORT NEW LOADS THAT THIS DESIGN WILL IMPOSE ON IT, AND THEREFORE SUCH EVALUATIONS / DETERMINATIONS HAVE NOT BEEN MADE. SHOULD THE CONTRACTOR (AT ANY TIME) HAVE SUFFICIENT CAUSE FOR CONCERN, THEN THESE CONCERNS SHOULD BE BROUGHT TO THE ATTENTION OF THE OWNER AND/OR LANDLORD FOR FURTHER INVESTIGATION. IF NECESSARY, A STRUCTURAL ENGINEER CAN BE RETAINED TO DETERMINE IF ANY MITIGATION WORK WILL BE REQUIRED.

3. MECHANICAL CONTRACTOR TO REVIEW SPECIFIED HVAC UNITS IN DETAIL, INCLUDING SPECIFICATION FEATURES AND ANTICIPATED AVAILABILITY AND LEAD TIMES. MECHANICAL CONTRACTOR MAY SUBMIT PROPOSED SUBSTITUTIONS TO THE SPECIFIED EQUIPMENT IF SUCH SUBSTITUTION FAVORS THE OWNER'S INTERESTS. PROPOSED SUBSTITUTIONS MAY ALSO ACCOUNT FOR THE MECHANICAL CONTRACTOR'S KNOWLEDGE, EXPERTISE, AND RELEVANT EXPERIENCE WORKING IN A SPECIFIC CLIMATIC AREA OR WITH A SPECIFIC JURISDICTION HAVING AUTHORITY.

REFERENCE NOTES: (X)

(1) MOUNT PACKAGED WALL MOUNTED UNIT PER DETAIL ON SHEET M4.01.

(2) ROUTE SUPPLY DUCTWORK FROM WALL MOUNTED UNIT THROUGH WALL TO SUPPLY DIFFUSER MOUNTED ON WALL.

(3) ROUTE RETURN DUCTWORK FROM WALL MOUNTED UNIT THROUGH WALL TO RETURN GRILLE PER DETAIL ON SHEET M4.01.

(4) INSTALL NEW BARD DC3002 SERIES SOLID STATE LEAD/LAG CONTROLLER DIGITAL THERMOSTAT AND HUMIDISTAT. MOUNT 4'-0" ABOVE THE FINISH FLOOR.

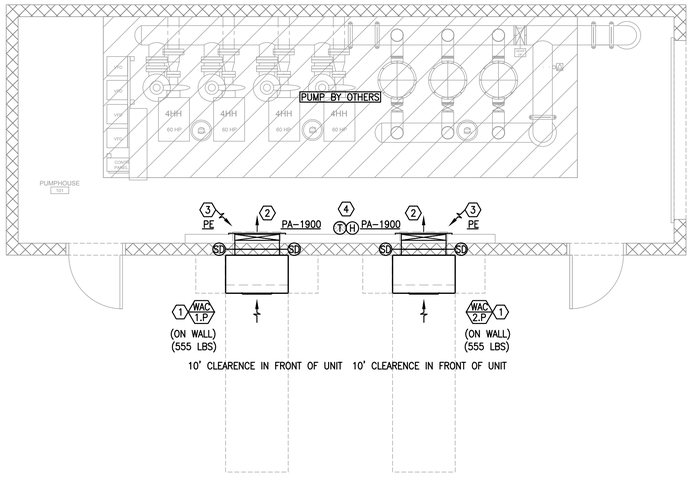

1 PUMPHOUSE EAST BUILDING - FLOOR PLAN - MECHANICAL

SCALE: 1/4" = 1'-0"

THE FALLS AT DRAKE POINT
LAKE COUNTY, FLORIDA

SHEET NAME:
PUMPHOUSE
EAST BUILDING
FLOOR PLAN
MECHANICAL

SHEET NUMBER:

M1.51

© Copyright 2021 ACI, Inc.

GENERAL NOTES:

1. THE GENERAL CONTRACTOR IS REQUIRED TO REVIEW AND COORDINATE BETWEEN THE ENGINEERING DRAWINGS AND THE WATER TREATMENT CONTRACTOR DRAWINGS. DISCREPANCIES DISCOVERED BETWEEN THESE ENGINEERING PLANS AND THE WATER TREATMENT CONTRACTOR DESIGNS MUST BE BROUGHT TO THE ATTENTION OF THE ARCHITECT OR ENGINEER IMMEDIATELY FOR RESOLUTION AND DIRECTION PRIOR TO PROCEEDING WITH WORK.

2. NEW HVAC EQUIPMENT IS BEING INSTALLED ON (AND/OR SUSPENDED FROM) THE ROOF DECK OF THIS PROJECT. THE CONTRACTOR IS CAUTIONED THAT IT IS NOT WITHIN THE DESIGN TEAM'S SCOPE OF WORK TO EVALUATE THE CAPACITY OR INTEGRITY OF THE BUILDING'S STRUCTURAL SYSTEMS OR TO DETERMINE IF THE STRUCTURE IS ABLE TO ADEQUATELY SUPPORT NEW LOADS THAT THIS DESIGN WILL IMPOSE ON IT, AND THEREFORE SUCH EVALUATIONS / DETERMINATIONS HAVE NOT BEEN MADE. SHOULD THE CONTRACTOR (AT ANY TIME) HAVE SUFFICIENT CAUSE FOR CONCERN, THEN THESE CONCERNS SHOULD BE BROUGHT TO THE ATTENTION OF THE OWNER AND/OR LANDLORD FOR FURTHER INVESTIGATION. IF NECESSARY, A STRUCTURAL ENGINEER CAN BE RETAINED TO DETERMINE IF ANY MITIGATION WORK WILL BE REQUIRED.

3. MECHANICAL CONTRACTOR TO REVIEW SPECIFIED HVAC UNITS IN DETAIL, INCLUDING SPECIFICATION FEATURES AND ANTICIPATED AVAILABILITY AND LEAD TIMES. MECHANICAL CONTRACTOR MAY SUBMIT PROPOSED SUBSTITUTIONS TO THE SPECIFIED EQUIPMENT IF SUCH SUBSTITUTION FAVORS THE OWNER'S INTERESTS. PROPOSED SUBSTITUTIONS MAY ALSO ACCOUNT FOR THE MECHANICAL CONTRACTOR'S KNOWLEDGE, EXPERTISE, AND RELEVANT EXPERIENCE WORKING IN A SPECIFIC CLIMATIC AREA OR WITH A SPECIFIC JURISDICTION HAVING AUTHORITY.

REFERENCE NOTES: (X)

(1) MOUNT PACKAGED WALL MOUNTED UNIT PER DETAIL ON SHEET M4.01.

(2) ROUTE SUPPLY DUCTWORK FROM WALL MOUNTED UNIT THROUGH WALL TO SUPPLY DIFFUSER MOUNTED ON WALL.

(3) ROUTE RETURN DUCTWORK FROM WALL MOUNTED UNIT THROUGH WALL TO RETURN GRILLE PER DETAIL ON SHEET M4.01.

(4) INSTALL NEW BARD DC3002 SERIES SOLID STATE LEAD/LAG CONTROLLER DIGITAL THERMOSTAT AND HUMIDISTAT. MOUNT 4'-0" ABOVE THE FINISH FLOOR.

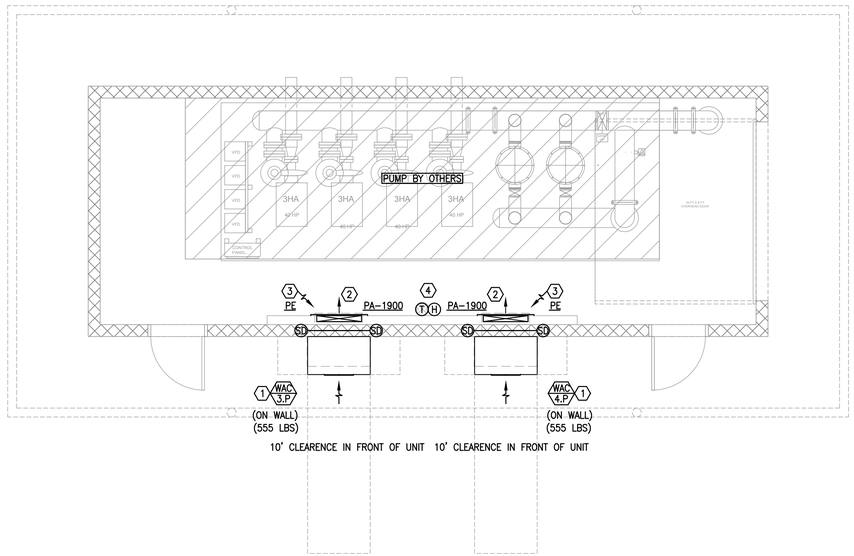

1 PUMPHOUSE WEST BUILDING - FLOOR PLAN - MECHANICAL

SCALE: 1/4" = 1'-0"

THE FALLS AT DRAKE POINT
LAKE COUNTY, FLORIDA

SHEET NAME:
PUMPHOUSE
WEST BUILDING
FLOOR PLAN
MECHANICAL

SHEET NUMBER:
M1.52

© Copyright 2021 ACI, Inc.

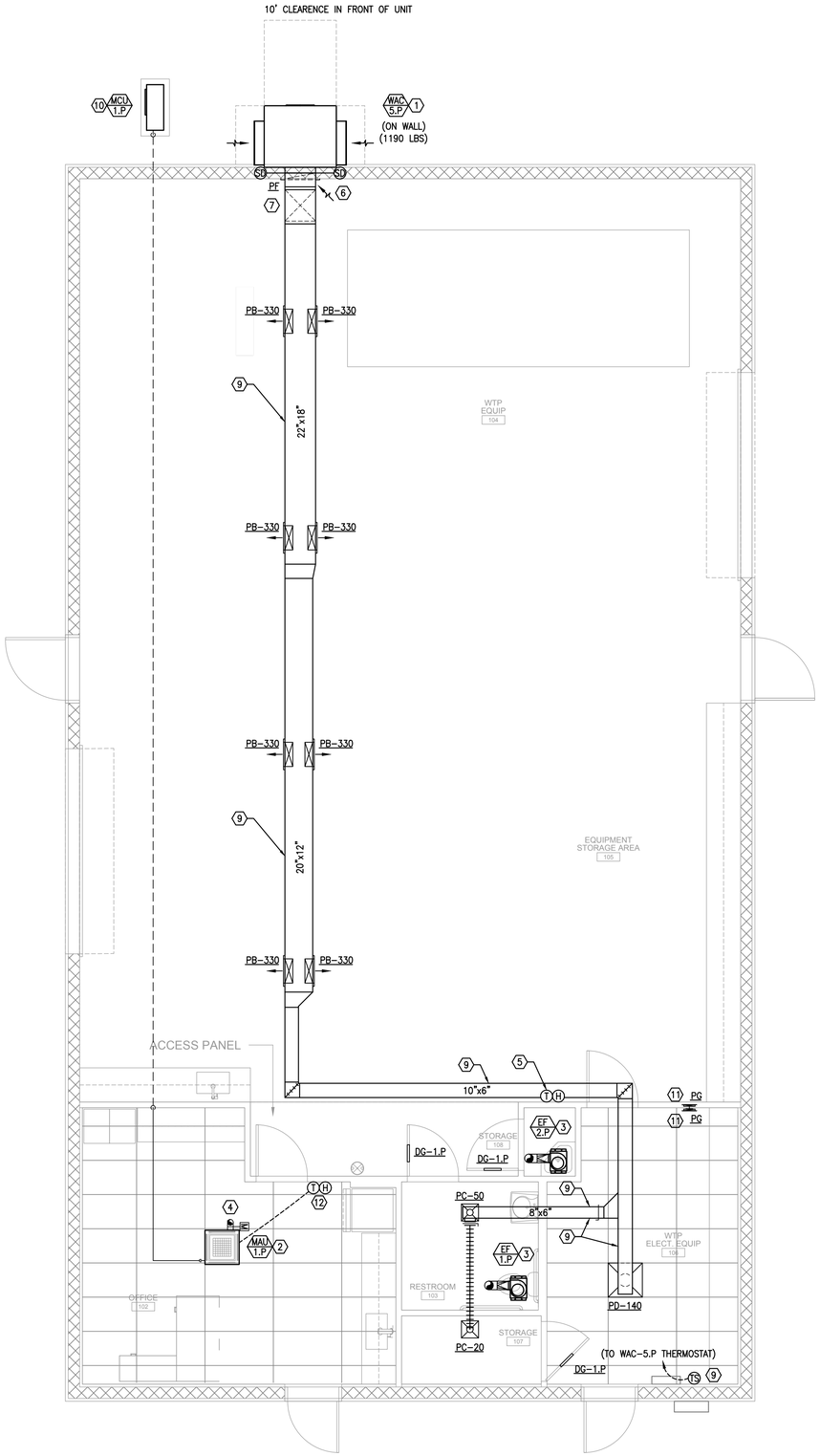

1 WATER TREATMENT BUILDING - FLOOR PLAN - MECHANICAL

SCALE: 1/4" = 1'-0"

GENERAL NOTES:

1. THE GENERAL CONTRACTOR IS REQUIRED TO REVIEW AND COORDINATE BETWEEN THE ENGINEERING DRAWINGS AND THE WATER TREATMENT CONTRACTOR DRAWINGS. DISCREPANCIES DISCOVERED BETWEEN THESE ENGINEERING PLANS AND THE WATER TREATMENT CONTRACTOR DESIGNS MUST BE BROUGHT TO THE ATTENTION OF THE ARCHITECT OR ENGINEER IMMEDIATELY FOR RESOLUTION AND DIRECTION PRIOR TO PROCEEDING WITH WORK.

2. NEW HVAC EQUIPMENT IS BEING INSTALLED ON (AND/OR SUSPENDED FROM) THE ROOF DECK OF THIS PROJECT. THE CONTRACTOR IS CAUTIONED THAT IT IS NOT WITHIN THE DESIGN TEAM'S SCOPE OF WORK TO EVALUATE THE CAPACITY OR INTEGRITY OF THE BUILDING'S STRUCTURAL SYSTEMS OR TO DETERMINE IF THE STRUCTURE IS ABLE TO ADEQUATELY SUPPORT NEW LOADS THAT THIS DESIGN WILL IMPOSE ON IT, AND THEREFORE SUCH EVALUATIONS / DETERMINATIONS HAVE NOT BEEN MADE. SHOULD THE CONTRACTOR (AT ANY TIME) HAVE SUFFICIENT CAUSE FOR CONCERN, THEN THESE CONCERNS SHOULD BE BROUGHT TO THE ATTENTION OF THE OWNER AND/OR LANDLORD FOR FURTHER INVESTIGATION. IF NECESSARY, A STRUCTURAL ENGINEER CAN BE RETAINED TO DETERMINE IF ANY MITIGATION WORK WILL BE REQUIRED.

3. MECHANICAL CONTRACTOR TO REVIEW SPECIFIED HVAC UNITS IN DETAIL, INCLUDING SPECIFICATION FEATURES AND ANTICIPATED AVAILABILITY AND LEAD TIMES. MECHANICAL CONTRACTOR MAY SUBMIT PROPOSED SUBSTITUTIONS TO THE SPECIFIED EQUIPMENT IF SUCH SUBSTITUTION FAVORS THE OWNER'S INTERESTS. PROPOSED SUBSTITUTIONS MAY ALSO ACCOUNT FOR THE MECHANICAL CONTRACTOR'S KNOWLEDGE, EXPERTISE, AND RELEVANT EXPERIENCE WORKING IN A SPECIFIC CLIMATIC AREA OR WITH A SPECIFIC JURISDICTION HAVING AUTHORITY.

REFERENCE NOTES: ⟨X⟩

1. MOUNT PACKAGED WALL MOUNTED UNIT PER DETAIL ON SHEET M4.01.
2. MOUNT MAU IN CEILING SPACE. ROUTE REFRIGERANT LINES DOWN WALL CAVITY TO CONDENSING UNIT ON GRADE. ROUTE CONDENSATE DRAIN LINE DOWN WALL AND OUT TO GRASSY AREA PER DETAIL. PROVIDE CONDENSATE PUMP EQUAL TO BLUEDIAMOND X87-721. CONDENSATE PUMP MUST BE ACCESSIBLE.
3. ROUTE 6"ø EXHAUST DUCT FROM CEILING MOUNTED EXHAUST FAN THROUGH TRUSS SPACE UP THROUGH ROOF. TERMINATE DUCT AT EXTERIOR ROOF CAP WITH INTEGRAL BIRD SCREEN. PRIME COAT AND PAINT ROOF CAP TO MATCH BUILDING COLOR.
4. ROUTE 4"ø OUTSIDE AIR DUCT FROM MAU THROUGH TRUSS SPACE UP THROUGH ROOF. TERMINATE DUCT AT EXTERIOR ROOF CAP. PROVIDE MOTORIZED DAMPER IN DUCT. PRIME COAT AND PAINT ROOF CAP TO MATCH BUILDING COLOR. OUTSIDE AIR DUCT SHALL BE LOCATED A MINIMUM OF 10'-0" AWAY FROM ANY DISCHARGE AIR. PROVIDE WITH INTEGRAL BIRD SCREEN.
5. INSTALL NEW BARD PGDX DIGITAL THERMOSTAT WITH HUMIDISTAT. MOUNT 4'-0" ABOVE FINISHED FLOOR.
6. ROUTE RETURN DUCTWORK FROM WALL MOUNTED UNIT THROUGH WALL TO RETURN GRILLE PER DETAIL ON SHEET M4.02.
7. ROUTE SUPPLY DUCTWORK FROM WALL MOUNTED UNIT THROUGH WALL TIGHT TO CEILING SPACE AND ROUTE TO AREAS SHOWN.
8. MOUNT NEW BARD LC600 (8403-079) COMBINATION TEMPERATURE AND HUMIDITY SENSOR 4'0" ABOVE FINISHED FLOOR. ROUTE COMMUNICATIONS WIRE TO THERMOSTAT.
9. 1" INTERNALLY INSULATED METAL DUCTWORK.
10. MOUNT CONDENSER ON NEW HOUSEKEEPING PAD PER DETAIL SHEET M4.02.
11. MOUNT RETURN GRILLES HIGH ON WALL.
12. INSTALL NEW HONEYWELL TH8321WF1001 DIGITAL THERMOSTAT WITH HUMIDISTAT. MOUNT 4'-0" ABOVE FINISHED FLOOR.

THE FALLS AT DRAKE POINT
LAKE COUNTY, FLORIDA

SHEET NAME:
WATER TREATMENT BUILDING FLOOR PLAN MECHANICAL

SHEET NUMBER:
M1.71

© Copyright 2021 ACI, Inc.

GENERAL NOTES:

1. CONTRACTOR TO VERIFY ALL MECHANICAL EQUIPMENT SELECTED FITS WITHIN DESIGNATED SPACE SHOWN ON MECHANICAL PLANS AND PROVIDES THE CORRECT CLEARANCES REQUIRED BY THE MANUFACTURER.
2. CONTRACTOR SHALL COORDINATE VOLTAGE, PHASE AND REQUIRED MOCP FOR EACH PIECE OF EQUIPMENT WITH THE ELECTRICAL CONTRACTOR PRIOR TO ORDERING.
3. IF PRODUCTS/EQUIPMENT ARE VALUE ENGINEERED OR SUBSTITUTED IT IS THE CONTRACTORS RESPONSIBILITY TO FIELD COORDINATE ALL NEW PRODUCTS/EQUIPMENT REQUIREMENTS WITH OTHER DISCIPLINES/TRADES.

OUTSIDE AIR CALCULATIONS - PUMPHOUSE

CLASSIFICATION	OCC. FACTOR OCCUPANCY/ 1000 SQFT. (PERSONS)	FBC-M SECTION 403 VALUES PER TABLE 403.3.1.1		SPACE AREA (SQFT)	SPACE LOAD (PERSONS)	OUTDOOR AIR REQUIRED (CFM)	OUTDOOR AIR SUPPLIED (CFM)
		Rp	Ra	Az	Pz		
WAC-1.P/2.P							
WAREHOUSE	0	10	0.06	464	0	27.84	30
TOTAL	–	–	–	464	0	27.84	30

NOTES:
1. REQUIRED OUTDOOR VENTILATION AIR VALUES TAKEN FROM FBC-M SECTION 403, TABLE 403.3.1.1.
   VENTILATION BREATHING ZONE FORMULA: Vbz = Rp * Pz + Ra * Az
   Pz = OCCUPANCY FACTOR * SPACE AREA

*AREA DOES NOT INCLUDE RESTROOMS.

AIR BALANCE (EAST PUMPHOUSE)

MAKEUP AIR:

WAC-1.P	20 CFM
WAC-2.P	20 CFM
MAKEUP TOTAL:	40 CFM

BUILDING PRESSURE = +40
(WITH ALL FANS ACTIVATED)

AIR DEVICE SCHEDULE

MARK	DESCRIPTION	FACE SIZE	NECK	MATERIAL	MANUFACTURER & MODEL NO.	NOTES
PA	EGGCRATE FACE 4-WAY SUPPLY GRILLE	10"x30"	SEE PLAN	ALUMINUM	BARD SG-5W	1., 2., & 3.
PE	EGGCRATE FACE RETURN GRILLE	16"x30"	SEE PLAN	ALUMINUM	BARD RG-10W	1., 2., & 3.

NOTES:
1. COORIDINATE SURFACE FINISHES WITH ARCHITECTURAL DRAWINGS.
2. PROVIDE RAPID MOUNT FRAME FOR PLASTER AND SHEET ROCK CEILINGS.
3. SUPPLY COMPLETE FACTORY INSTALLED 1/2" THICK FOIL BACKED INSULATION.
4. PROVIDE REMOTE DAMPERS FOR AIR DEVICE IN HARD CEILING.

PACKAGE WALL AIR CONDITIONING UNIT SCHEDULE - ELECTRIC

PLAN MARK	LOCATION SERVED	EVAPORATOR SECTION											HEATER		CONDENSER SECTION				ELECTRICAL REQUIERMENTS			UNIT WEIGHT (LBS.)	EER	MANUFACTURER	UNIT MODEL	NOTES
		SUPPLY AIRFLOW (CFM)	OUTSIDE AIRFLOW (CFM)	E.A.T. DB (F)	E.A.T. WB (F)	L.A.T. DB (F)	L.A.T. WB (F)	TOTAL COOLING (MBH)	SENSIBLE COOLING (MBH)	ESP (IN WG)	H.P.	R.P.M.	HEATER (KW)	HEATER STAGES	NO. COMPRESSOR	COMPRESSOR RLA (EACH)	NO. CONDENSER FANS	CONDENSER FAN FLA (EA.)	V-PH-HZ	M.C.A.	M.O.C.P.					
WAC-1.P	EAST PUMPHOUSE	1,900	40	80.0	67.0	54.9	54.3	71.0	49.9	0.25	1/2	1,075	9	1	1	11.4	1	10.6	480-3-60	19.0	25.0	555	10.00	BARD	W72AYCPC	1., – 4.
WAC-2.P	EAST PUMPHOUSE	1,900	40	80.0	67.0	54.9	54.3	71.0	49.9	0.25	1/2	1,075	9	1	1	11.4	1	10.6	480-3-60	19.0	25.0	555	10.00	BARD	W72AYCPC	1., – 4.

NOTES:
1. PROVIDE COMPLETE WITH PULL TYPE DISCONNECT SWITCH (PROVIDED BY DIVISION 16) TIME DELAY RELAY AND ANTI-SHORT CYCLE TIMER.
2. PROVIDE UNIT WITH MANUFACTURER ECONOMIZER MODULE INCLUDING OA, RA AND RELIEF CONTROLS PROVISIONS AND CONTROLS IN ACCORDANCE WITH THE LATEST MECHANICAL CODE AND BALANCED PER OUTSIDE AIR SCHEDULE.
3. PROVIDE UNIT WITH SUPPLY AND RETURN DUCTED MOUNTED SMOKE DETECTORS.
4. PROVIDE WITH BARD DC3002 SERIES LEAD/LAG CONTROLLER. WHEN THE ROOM TEMPERATURE RISES TO 76 DEGREES THE DUTY UNIT SHALL BE ENERGIZED AND RUN. THE COOLING SETPOINT PLUS 6 DEGREES (82 DEF F), THE LAG UNIT SHALL ENERGIZE FOR FULL CAPACITY, THE DUTY UNIT TO CONTINUE TO RUN AT FULL CAPACITY.

THE FALLS AT DRAKE POINT
LAKE COUNTY, FLORIDA

SHEET NAME:

SCHEDULES
MECHANICAL

SHEET NUMBER:

M3.01

© Copyright 2021 ACI, Inc.

GENERAL NOTES:

1. CONTRACTOR TO VERIFY ALL MECHANICAL EQUIPMENT SELECTED FITS WITHIN DESIGNATED SPACE SHOWN ON MECHANICAL PLANS AND PROVIDES THE CORRECT CLEARANCES REQUIRED BY THE MANUFACTURER.
2. CONTRACTOR SHALL COORDINATE VOLTAGE, PHASE AND REQUIRED MOCP FOR EACH PIECE OF EQUIPMENT WITH THE ELECTRICAL CONTRACTOR PRIOR TO ORDERING.
3. IF PRODUCTS/EQUIPMENT ARE VALUE ENGINEERED OR SUBSTITUTED IT IS THE CONTRACTORS RESPONSIBILITY TO FIELD COORDINATE ALL NEW PRODUCTS/EQUIPMENT REQUIREMENTS WITH OTHER DISCIPLINES/TRADES.

OUTSIDE AIR CALCULATIONS - PUMPHOUSE

CLASSIFICATION	OCC. FACTOR OCCUPANCY/ 1000 SQFT. (PERSONS)	FBC-M SECTION 403 VALUES PER TABLE 403.3.1.1		SPACE AREA (SQFT)	SPACE LOAD (PERSONS)	OUTDOOR AIR REQUIRED	OUTDOOR AIR SUPPLIED
		Rp	Ra	Az	Pz	(CFM)	(CFM)
WAC-3.P/4.P							
WAREHOUSE	0	10	0.06	464	0	27.84	30
TOTAL	–	–	–	464	0	27.84	30

NOTES:
1. REQUIRED OUTDOOR VENTILATION AIR VALUES TAKEN FROM FBC-M SECTION 403, TABLE 403.3.1.1.
   VENTILATION BREATHING ZONE FORMULA: Vbz = Rp * Pz + Ra * Az
   Pz = OCCUPANCY FACTOR * SPACE AREA

*AREA DOES NOT INCLUDE RESTROOMS.

AIR BALANCE (WEST PUMPHOUSE)

MAKEUP AIR:

WAC-3.P	20 CFM
WAC-4.P	20 CFM
MAKEUP TOTAL:	40 CFM

BUILDING PRESSURE = +40
(WITH ALL FANS ACTIVATED)

AIR DEVICE SCHEDULE

MARK	DESCRIPTION	FACE SIZE	NECK	MATERIAL	MANUFACTURER & MODEL NO.	NOTES
PA	EGGCRATE FACE 4-WAY SUPPLY GRILLE	10"x30"	SEE PLAN	ALUMINUM	BARD SG-5W	1., 2., & 3.
PE	EGGCRATE FACE RETURN GRILLE	16"x30"	SEE PLAN	ALUMINUM	BARD RG-10W	1., 2., & 3.

NOTES:
1. COORIDINATE SURFACE FINISHES WITH ARCHITECTURAL DRAWINGS.
2. PROVIDE RAPID MOUNT FRAME FOR PLASTER AND SHEET ROCK CEILINGS.
3. SUPPLY COMPLETE FACTORY INSTALLED 1/2" THICK FOIL BACKED INSULATION.
4. PROVIDE REMOTE DAMPERS FOR AIR DEVICE IN HARD CEILING.

PACKAGE WALL AIR CONDITIONING UNIT SCHEDULE - ELECTRIC

PLAN MARK	LOCATION SERVED	EVAPORATOR SECTION											HEATER		CONDENSER SECTION				ELECTRICAL REQUIERMENTS			UNIT WEIGHT (LBS.)	EER	MANUFACTURER	UNIT MODEL	NOTES
		SUPPLY AIRFLOW (CFM)	OUTSIDE AIRFLOW (CFM)	E.A.T. DB (F)	E.A.T. WB (F)	L.A.T. DB (F)	L.A.T. WB (F)	TOTAL COOLING (MBH)	SENSIBLE COOLING (MBH)	ESP (IN WG)	H.P.	R.P.M.	HEATER (KW)	HEATER STAGES	NO. COMPRESSOR	COMPRESSOR RLA (EACH)	NO. CONDENSER FANS	CONDENSER FAN FLA (EA.)	V-PH-HZ	M.C.A.	M.O.C.P.					
WAC-3.P	WEST PUMPHOUSE	1,900	40	80.0	67.0	54.9	54.3	71.0	49.9	0.25	1/2	1,075	9	1	1	11.4	1	10.6	480-3-60	19.0	25.0	555	10.00	BARD	W72AYCPC	1., – 4.
WAC-4.P	WEST PUMPHOUSE	1,900	40	80.0	67.0	54.9	54.3	71.0	49.9	0.25	1/2	1,075	9	1	1	11.4	1	10.6	480-3-60	19.0	25.0	555	10.00	BARD	W72AYCPC	1., – 4.

NOTES:
1. PROVIDE COMPLETE WITH PULL TYPE DISCONNECT SWITCH (PROVIDED BY DIVISION 16) TIME DELAY RELAY AND ANTI-SHORT CYCLE TIMER.
2. PROVIDE UNIT WITH MANUFACTURER ECONOMIZER MODULE INCLUDING OA, RA AND RELIEF CONTROLS PROVISIONS AND CONTROLS IN ACCORDANCE WITH THE LATEST MECHANICAL CODE AND BALANCED PER OUTSIDE AIR SCHEDULE.
3. PROVIDE UNIT WITH SUPPLY AND RETURN DUCTED MOUNTED SMOKE DETECTORS.
4. PROVIDE WITH BARD DC3002 SERIES LEAD/LAG CONTROLLER. WHEN THE ROOM TEMPERATURE RISES TO 76 DEGREES THE DUTY UNIT SHALL BE ENERGIZED AND RUN. THE COOLING SETPOINT PLUS 6 DEGREES (82 DEF F), THE LAG UNIT SHALL ENERGIZE FOR FULL CAPACITY, THE DUTY UNIT TO CONTINUE TO RUN AT FULL CAPACITY.

THE FALLS AT DRAKE POINT
LAKE COUNTY, FLORIDA

SHEET NAME:

SCHEDULES
MECHANICAL

SHEET NUMBER:

M3.02

© Copyright 2021 ACI, Inc.

GENERAL NOTES:

1. CONTRACTOR TO VERIFY ALL MECHANICAL EQUIPMENT SELECTED FITS WITHIN DESIGNATED SPACE SHOWN ON MECHANICAL PLANS AND PROVIDES THE CORRECT CLEARANCES REQUIRED BY THE MANUFACTURER.
2. CONTRACTOR SHALL COORDINATE VOLTAGE, PHASE AND REQUIRED MOCP FOR EACH PIECE OF EQUIPMENT WITH THE ELECTRICAL CONTRACTOR PRIOR TO ORDERING.
3. IF PRODUCTS/EQUIPMENT ARE VALUE ENGINEERED OR SUBSTITUTED IT IS THE CONTRACTORS RESPONSIBILITY TO FIELD COORDINATE ALL NEW PRODUCTS/EQUIPMENT REQUIREMENTS WITH OTHER DISCIPLINES/TRADES.

DOOR GRILLE SCHEDULE

MARK	SERVICE	W x H (IN)	MANUFACTURER & MODEL NO.	NOTES
DG-1.P	VENTILATION	12"x12"	HART & COOLEY TG	1. & 2.

NOTES:
1. PROVIDE HART AND COOLEY TGF FRAME.
2. GRILLE TO BE INSTALLED ON BOTH SIDES OF THE DOOR.

AIR DEVICE SCHEDULE

MARK	DESCRIPTION	FACE SIZE	NECK	MATERIAL	MANUFACTURER & MODEL NO.	NOTES
PB	EGGCRATE FACE SUPPLY GRILLE	17"x5"	SEE PLAN	ALUMINUM	BARD SG-1W	1., 2., & 3.
PC	SQUARE CONE SUPPLY DIFFUSER	12"x12"	SEE PLAN	ALUMINUM	PRICE APDN	1., 2., 3., & 4.
PD	SQUARE CONE SUPPLY DIFFUSER	24"x24"	SEE PLAN	ALUMINUM	PRICE APDN	1., 2., & 3.
PF	EGGCRATE FACE RETURN GRILLE	22"x43"	SEE PLAN	ALUMINUM	BARD RG-5W	1., 2., & 3.
PG	EGGCRATE RET./EXH. GRILLE (1/2"x1/2"x1/2")	8"x6"	SEE PLAN	ALUMINUM	PRICE 80	1., 2., & 3.

NOTES:
1. COORIDINATE SURFACE FINISHES WITH ARCHITECTURAL DRAWINGS.
2. PROVIDE RAPID MOUNT FRAME FOR PLASTER AND SHEET ROCK CEILINGS.
3. SUPPLY COMPLETE FACTORY INSTALLED 1/2" THICK FOIL BACKED INSULATION.
4. PROVIDE REMOTE DAMPERS FOR AIR DEVICE IN HARD CEILING.

OUTSIDE AIR CALCULATIONS - WATER TREATMENT

CLASSIFICATION	OCC. FACTOR OCCUPANCY/ 1000 SQFT. (PERSONS)	IBC-M SECTION 403 VALUES PER TABLE 403.3.1.1		SPACE AREA (SQFT)	SPACE LOAD (PERSONS)	OUTDOOR AIR REQUIRED (CFM)	OUTDOOR AIR SUPPLIED (CFM)
		Rp	Ra	Az	Pz		
MAU-1.P							
OFFICE	5	5	0.06	464	3*	42.84	45
WAC-3.P							
WAREHOUSE	0	10	0.06	2,163	0	129.78	130
STORAGE	0	0	0.12	175	0	21	25
TOTAL	–	–	–	2,802	3	193.62	200

NOTES:
1. REQUIRED OUTDOOR VENTILATION AIR VALUES TAKEN FROM IBC-M SECTION 403, TABLE 403.3.1.1.
   VENTILATION BREATHING ZONE FORMULA: Vbz = Rp * Pz + Ro * Az
   Pz = OCCUPANCY FACTOR * SPACE AREA

*AREA DOES NOT INCLUDE RESTROOMS.

WATER TREATMENT BUILDING FAN SCHEDULE

MARK	AREA SERVED	TYPE	CFM	T.S.P.	HP/WATTS	RPM	VOLTS/PH	SONES	WEIGHT	MANUFACTURER & MODEL NO.	NOTES
EF-1.P	RESTROOM	CEILING	71	0.5	80 WATTS	950	120/1ø	2.0	10.0	GREENHECK-SP-B110	1. & 2.
EF-2.P	JANITOR	CEILING	51	0.5	80 WATTS	709	120/1ø	1.5	10.0	GREENHECK-SP-B110	1. & 3.

NOTES:
1. PROVIDE WITH VIBRATION ISOLATORS, INTEGRAL BACKDRAFT DAMPER, MOTION SENSOR, MULTI-SPEED MODULE (ACCESSORIES TO FAN), AND ROOF/WALL CAP.
2. EXHAUST FAN TO OPERATE ON OCCUPANCY SENSOR (ACCESSORY TO FAN).
3. EXHAUST FAN TO OPERATE ON TIME CLOCK (ACCESSORY TO FAN).

WATER TREATMENT BUILDING CASSETTE AIR HANDLING UNIT SCHEDULE

MARK	LOCATION SERVED	FAN					COOLING COIL			FILTERS			ELECTRIC HEATING COIL		SINGLE POINT UNIT ELECTRICAL REQUIREMENTS			UNIT INFORMATION					
		TOTAL AIR FLOW (CFM)	OUTSIDE AIR FLOW (CFM)	EXTERNAL STATIC PRESS. (IN.WG.)	DRIVE TYPE	FLA	ENTERING AIR TEMP. (F° DB/WB)	LEAVING AIR TEMP. (F° DB/WB)	TOTAL CAPACITY (BTUH)	TYPE	EFFICIENCY	THICKNESS	TOTAL CAPACITY (BTUH)	HEATER WATTS	VOLTAGE/ PHASE	SINGLE CIRCUIT MCA	SINGLE CIRCUIT MOCP	UNIT SIZE (H"xW"xD")	OPERATING WEIGHT (LBS.)	MANUFACTURER	MODEL NUMBER	MOUNTING	NOTES
MAU-1.P	OFFICE	300	45	–	–	0.29	80.0/67.0	56.0/54.0	9,000	INTERNAL	25%-30%	–	11,000	940	208V/1ø	1.0	–	10"x23"x23"	31	MITSUBISHI OR EQUAL	SLZ-KF09NA1	WALL	1., 2. & 3.

NOTES:
1. POWER FOR INDOOR UNIT PROVIDED FROM EXTERIOR CONDENSER. COORDINATE WITH ELECTRICAL CONTRACTOR TO PROVIDE POWER WIRING BETWEEN EACH UNIT IN FIELD.
2. ROUTE AND SIZE REFRIGERANT LINES PER MANUFACTURER'S REQUIREMENTS.
3. MOUNT IN CEILING. REFER TO ARCHITECTURAL CEILING PLAN FOR EXACT CEILING TYPE. PROVIDE CONDENSATE PUMP WHERE REQUIRED.

AIR BALANCE (TREATMENT BLDG.)

EXHAUST:

EF-1.P	71 CFM
EF-2.P	51 CFM
EXHAUST TOTAL:	122 CFM

MAKEUP AIR:

MAU-1.P	45 CFM
WAC-5.P	155 CFM
MAKEUP TOTAL:	200 CFM

BUILDING PRESSURE = +78
(WITH ALL FANS ACTIVATED)

WATER TREATMENT BUILDING CASSETTE CONDENSING UNIT SCHEDULE (HEAT PUMP)

MARK	LOCATION	COMPRESSOR				CONDENSER FANS			ELECTRICAL			UNIT INFORMATION				MANUFACTURER	MODEL NUMBER	NOTES
		OUTDOOR DESIGN TEMP. (F°)	QTY.	CAPACITY STEP'S %	RLA/LRA EACH	QTY.	HP	FLA EACH	VOLTAGE/PHASE	MCA	MOCP	SEER2	HSPF2	UNIT SIZE (H"xW"xD")	OPERATING WEIGHT (LBS.)			
MCU-1.P	GROUND	95'	1	100	6.2/7.7	1	–	0.50	208V/1ø	9.0	15	24.0	10.0	22"x32"x12"	81	MITSUBISHI OR EQUAL	SUZ-KA09NA2	1., 2. & 3.

NOTES:
1. PROVIDE COMPLETE WITH PULL TYPE DISCONNECT SWITCH (PROVIDED BY DIVISION 16) TIME DELAY RELAY AND ANTI-SHORT CYCLE TIMER.
2. TOTAL DEVELOPED LINESET LENGTH, INCLUDING HORIZONTAL AND VERTICAL DISTANCE, TO BE VERIFIED WITH CONDENSING UNIT MANUFACTURER PRIOR TO PURCHASE. IF CONDENSING UNIT LOCATIONS EXCEED THE MANUFACTURER'S RECOMMENDED TOTAL LINESET LENGTH VERIFY THE MANUFACTURER HAS AN OPTION TO ALLOW FOR LONG LINESETS AND PROVIDE ACCESSORIES AS REQUIRED.
3. MOUNT AND SECURE CONDENSING UNITS PER DETAILS PROVIDED.

PACKAGE WALL AIR CONDITIONING UNIT SCHEDULE - ELECTRIC

PLAN MARK	LOCATION SERVED	EVAPORATOR SECTION											HEATER		CONDENSER SECTION				ELECTRICAL REQUIERMENTS			UNIT WEIGHT (LBS.)	EER	MANUFACTURER	UNIT MODEL	NOTES
		SUPPLY AIRFLOW (CFM)	OUTSIDE AIRFLOW (CFM)	E.A.T. DB (F)	E.A.T. WB (F)	L.A.T. DB (F)	L.A.T. WB (F)	TOTAL COOLING (MBH)	SENSIBLE COOLING (MBH)	ESP (IN WG)	H.P.	R.P.M.	HEATER (KW)	HEATER STAGES	NO. COMPRESSOR	COMPRESSOR RLA (EACH)	NO. CONDENSER FANS	CONDENSER FAN FLA (EA.)	V-PH-HZ	M.C.A.	M.O.C.P.					
WAC-5.P	TREATMENT BUILDING	2,850	155	80.0	67.0	54.9	54.3	90.0	67.2	0..25	3	1,500	18	2	2	10.0/11.0	1	7.2	480-3-60	53.0	60.0	1,190	9.81	BARD	W090A	1., 2., 3. & 5.

NOTES:
1. PROVIDE COMPLETE WITH PULL TYPE DISCONNECT SWITCH (PROVIDED BY DIVISION 16) TIME DELAY RELAY AND ANTI-SHORT CYCLE TIMER.
2. PROVIDE UNIT WITH MANUFACTURER ECONOMIZER MODULE INCLUDING OA, RA AND RELIEF CONTROLS PROVISIONS AND CONTROLS IN ACCORDANCE WITH THE LATEST MECHANICAL CODE AND BALANCED PER OUTSIDE AIR SCHEDULE.
3. PROVIDE UNIT WITH SUPPLY AND RETURN DUCTED MOUNTED SMOKE DETECTORS.
4. PROVIDE WITH BARD DC3002 SERIES LEAD/LAG CONTROLLER. WHEN THE ROOM TEMPERATURE RISES TO 76 DEGREES THE DUTY UNIT SHALL BE ENERGIZED AND RUN. THE COOLING SETPOINT PLUS 6 DEGREES (82 DEF F), THE LAG UNIT SHALL ENERGIZE FOR FULL CAPACITY, THE DUTY UNIT TO CONTINUE TO RUN AT FULL CAPACITY.
5. PROVIDE WITH BARD PGDX COMBINATION THERMOSTAT/HUMIDISTAT AND BARD LC6000 (8403-079) COMBINATION TEMPERATURE SENSOR WHERE NOTED.

THE FALLS AT DRAKE POINT
LAKE COUNTY, FLORIDA

SHEET NAME:
SCHEDULES
MECHANICAL

SHEET NUMBER:
M3.03

© Copyright 2021 ACi, Inc.

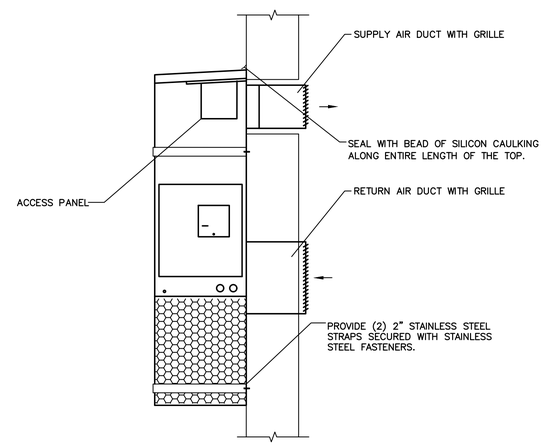

1 NTS WALL AC UNIT DETAIL

THE FALLS AT DRAKE POINT
LAKE COUNTY, FLORIDA

SHEET NAME:

DETAILS
MECHANICAL

SHEET NUMBER:

M4.01

© Copyright 2021 ACI, Inc.

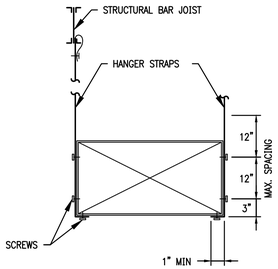

NOTES:

1. MAXIMUM SPACING BETWEEN HANGER LOCATIONS SHALL BE 8'-0" PER PAIR.
2. STRAPS SHALL BE MINIMUM 1 1/2" x 22 GAUGE GALVANIZED STEEL.
3. REFER TO SMACNA FOR ADDITIONAL REQUIREMENTS.

10 DUCTWORK SUPPORT DETAIL
NTS

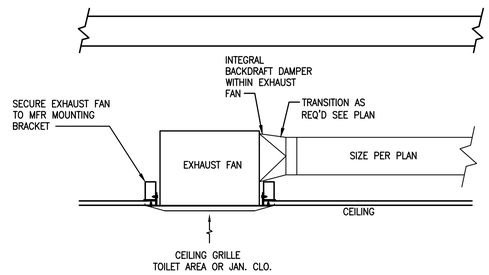

9 CEILING EXHAUST FAN SUPPORT DETAIL
NTS

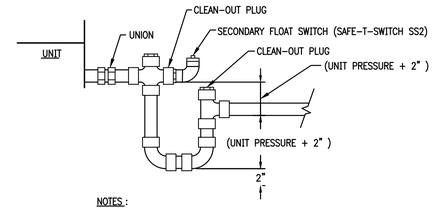

NOTES:

1. CONDENSATE DRAIN SHALL BE PIPED FULL SIZE OF UNIT CONNECTION.
2. CONDENSATE PANS SHALL BE INSTALLED WITH ADEQUATE PITCH TO ENSURE POSITIVE DRAINAGE OF ACCUMULATED CONDENSATE.
3. TRAP CONDENSATE AND DISCHARGE PER PLAN.

8 CONDENSATE DRAIN DETAIL
NTS

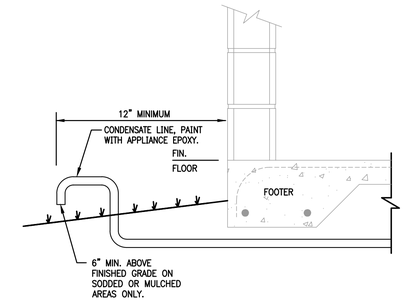

7 CONDENSING DRAIN TERMINATION DETAIL
NTS

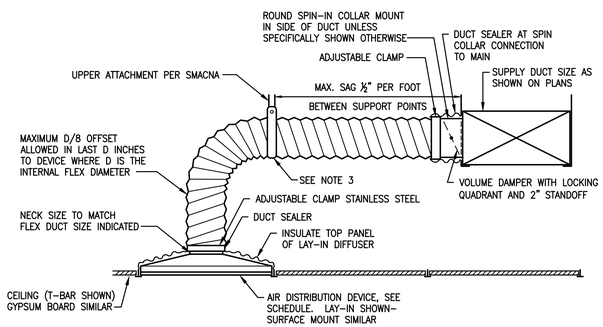

NOTES:

1. EXTEND FLEXIBLE DUCT INSULATION TO DUCT/DIFFUSER PANEL INSULATION AND SEAL WITH MASTIC.
2. MINIMUM 1-1/2" WIDE 22 GAUGE GALVANIZED STRAP HANGER WITH HEMMED EDGES PER SMACNA FIGURE 3-10.
3. FLEXIBLE AIR DUCT SHALL BE FULLY EXTENDED AND NOT COMPRESSED WITH ELBOW RADIUS NO LESS THAN R/D=1.0.

6 FLEXIBLE DUCT DETAIL
NTS

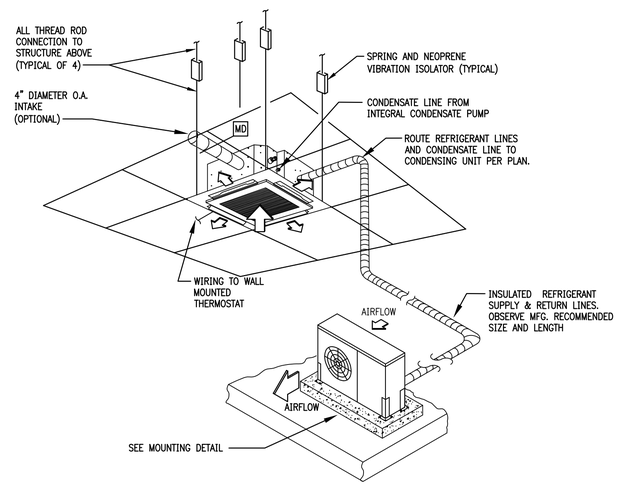

5 CEILING MOUNTED SPLIT SYSTEM SUPPORT DETAIL
NTS

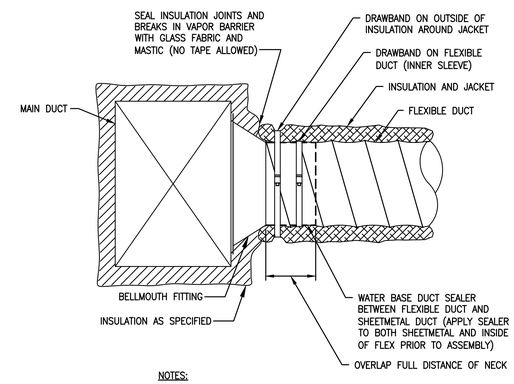

NOTES:

1. TYPICAL FOR: LOW PRESSURE AND HIGH PRESSURE CONNECTION TO MAIN DUCT, FAN TERMINAL UNITS, VARIABLE AIR VOLUME UNITS, AND DIFFUSERS.
2. DRAWBANDS SHALL BE EQUIVALENT TO PANDUIT PLT-H.

4 FLEXIBLE DUCT CONNECTION DETAIL
NTS

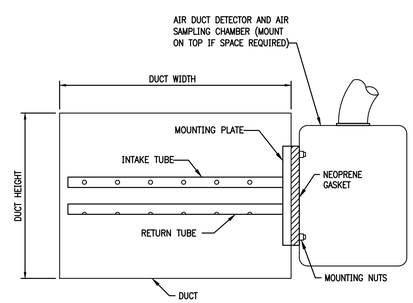

NOTES:

1. INSTALL IN STRICT ACCORDANCE WITH MANUFACTURERS INSTALLATION INSTRUCTIONS.
2. PROVIDE ACCESS DOOR AT SAMPLING TUBES.

3 SMOKE DETECTOR DETAIL
NTS

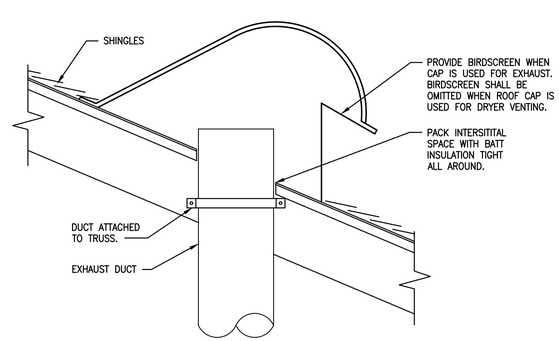

2 ROOF CAP DETAIL
NTS

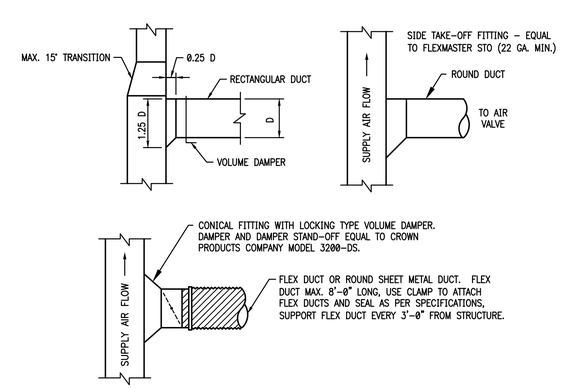

1 DUCT CONNECTION DETAIL
NTS

THE FALLS AT DRAKE POINT
LAKE COUNTY, FLORIDA

SHEET NAME:

DETAILS
MECHANICAL

SHEET NUMBER:

M4.02

© Copyright 2021 ACI, Inc.

MECHANICAL SPECIFICATIONS

GENERAL

THE GENERAL MECHANICAL SPECIFICATIONS APPLY TO THE WORK SPECIFIED IN THIS SECTION.

SCOPE OF WORK

FURNISH AND INSTALL COMPLETE AIR CONDITIONING SYSTEMS AS INDICATED ON THE DESIGN DRAWINGS AND AS OUTLINED WITHIN THESE SPECIFICATIONS. WORK SHALL INCLUDE BUT NOT BE LIMITED TO THE FABRICATION AND/OR INSTALLATION OF THE SCHEDULED AIR CONDITIONING UNITS, EXHAUST FANS, AIR DISTRIBUTION AND DUCTWORK.

CLEANING, TESTING AND ADJUSTING:
THE MECHANICAL CONTRACTOR, AT HIS EXPENSE, SHALL CLEAN, REPAIR, ADJUST, CHECK, BALANCE, AND PLACE IN SERVICE THE VARIOUS SYSTEMS HEREIN SPECIFIED WITH THEIR RESPECTIVE EQUIPMENT, ACCESSORIES AND PIPING. HE SHALL FURNISH ALL LABOR, MATERIALS, EQUIPMENT, AND TOOLS REQUIRED TO PERFORM TESTS REQUIRED BY THESE SPECIFICATIONS AND BY THE GOVERNING AUTHORITIES.

ALL EQUIPMENT AND DUCTWORK OPENINGS ARE TO BE PROVIDED WITH FILTRATION AND SEALING TO PROPERLY PROTECT IT FROM ANY DUST AND DEBRIS DURING CONSTRUCTION.

NO WORK SHALL BE COVERED OR CONCEALED UNTIL PROPERLY INSPECTED AND TESTED.

TESTING:
ADJUST THE AIR CONDITIONING SYSTEMS, VENTILATING SYSTEMS, FANS, ETC., TO DELIVER NOT LESS THAN THE REQUIRED AIR QUANTITY WITH QUANTITIES IN EXCESS TO BE SUBJECT TO THE APPROVAL OF THE ENGINEER IF FOUND TO NOT HAVE OBJECTIONABLE EFFECTS SUCH AS NOISE, DRAFTS, OR MOTOR OVERLOAD.

THIS CONTRACTOR SHALL PROVIDE THREE (3) COPIES OF A TEST AND BALANCE REPORT TO THE OWNER AT TIME OF SUBSTANTIAL COMPLETION INSPECTION.

THE TEST AND BALANCE REPORT SHALL BE TYPEWRITTEN AND CONTAIN THE FOLLOWING DATA:

1. DATE, TIME, WEATHER, WHEN TEST TAKEN.
2. AIR CAPACITIES AT EACH UNIT INCLUDING OUTSIDE AIR. (ENTERING AND LEAVING DB/WB)
3. STATIC PRESSURE THROUGH UNITS AND UNIT COMPONENTS.
4. MOTOR OPERATING VOLTAGE AND AMPERAGE.
5. DRIVE TYPES, SIZES AND SPEED RANGE.
6. IDENTIFICATION OF ALL AIR TERMINAL DEVICES WITH DESIGN CFM AND ACTUAL CFM.

ADDITIONALLY, SYSTEMS DRAWING CLEARLY MARKED TO IDENTIFY LOCATION OF EQUIPMENT AND AIR DEVICES TESTED SHALL BE PROVIDED ALONG WITH THE WRITTEN TEST AND BALANCE REPORT.

MAINTENANCE MANUALS

PROVIDE COMPLETE MAINTENANCE MANUALS (3 REQUIRED) ON ALL NEW EQUIPMENT. ORGANIZE OPERATING AND MAINTENANCE DATA INTO SUITABLE SETS OF MANAGEABLE SIZE. BIND PROPERLY INDEXED DATA INTO INDIVIDUAL, HEAVY-DUTY, 2-INCH, 3-RING VINYL COVERED BINDERS WITH POCKET FOLDERS FOR FOLDED SHEET INFORMATION. MARK APPROPRIATE IDENTIFICATION ON FRONT AND SPINE OF EACH BINDER. INCLUDE THE FOLLOWING TYPES OF INFORMATION. THE INFORMATION WILL BE TURNED OVER TO THE OWNER AT TIME OF SUBSTANTIAL COMPLETION:

- OPERATING AND MAINTENANCE INSTRUCTIONS
- SPARE PARTS LIST
- COPIES OF WARRANTIES
- WIRING DIAGRAMS
- INSPECTION REPORTS AND APPROVALS
- SHOP DRAWINGS AND PRODUCT DATA

TRAINING SERVICES

THOROUGHLY INSTRUCT THE OWNER'S REPRESENTATIVE IN THE OPERATION OF ALL EQUIPMENT FURNISHED AND LOCATION OF ALL VALVES AND CONTROL DEVICES.

TRAIN BUILDING OWNER'S PERSONNEL DURING NORMAL WORKING HOURS ON STARTUP AND SHUTDOWN PROCEDURES, TROUBLESHOOTING PROCEDURES, SERVICING AND PREVENTATIVE MAINTENANCE SCHEDULE AND PROCEDURES. REVIEW WITH THE OWNER'S PERSONNEL, THE DATA CONTAINED IN THE OPERATING AND MAINTENANCE MANUALS. SCHEDULE TRAINING WITH OWNER, PROVIDE AT LEAST 7-DAYS PRIOR NOTICE TO ARCHITECT/ENGINEER.

HANGERS AND SUPPORTS

PROVIDE ALL NECESSARY HANGER RODS, CLAMPS AND ATTACHMENTS TO PROPERLY INSTALL AND SUPPORT DUCTWORK, PIPING AND EQUIPMENT FROM THE BUILDING STRUCTURE.

PROVIDE ANY ANGLE IRON OR UNISTRUT AND SUSPENSION RODS REQUIRED TO INSTALL EQUIPMENT, PIPING AND DUCTWORK.

ALL SUPPORTS EXPOSED TO OUTDOORS SHALL BE CLEANED, PRIMED AND PAINTED TO PREVENT RUSTING. FINISH COLOR AS SELECTED BY OWNER.

THE USE OF BALING WIRE OR PERFORATED METAL STRAPPING IS NOT ACCEPTABLE FOR SUPPORTS.

WARRANTY/GUARANTEE:

THE CONTRACTOR SHALL WARRANTY/GUARANTEE AND MAINTAIN THE STABILITY OF WORK AND MATERIALS AND KEEP SAME IN PERFECT REPAIR AND CONDITION OF THE PERIOD OF ONE (1) YEAR.

DEFECTS OF ANY KIND DUE TO FAULTY WORK OR MATERIALS APPEARING DURING THE ABOVE MENTIONED PERIOD MUST BE IMMEDIATELY MADE GOOD BY THE CONTRACTOR AT HIS OWN EXPENSE TO THE ENTIRE SATISFACTION OF THE OWNER AND ARCHITECT AND ENGINEER. SUCH RECONSTRUCTION AND REPAIRS SHALL INCLUDE ALL DAMAGE TO THE FINISH OR FURNISHING OF THE BUILDING RESULTING FROM THE ORIGINAL DEFECT OR REPAIRS THERETO.

EQUIPMENT:

1.1 QUALITY ASSURANCE

A. ELECTRICAL COMPONENTS, DEVICES, AND ACCESSORIES: LISTED AND LABELED AS DEFINED IN NFPA 70, ARTICLE 100, BY A TESTING AGENCY ACCEPTABLE TO AUTHORITIES HAVING JURISDICTION, AND MARKED FOR INTENDED USE.
B. UNITS SHALL BE DESIGNED TO OPERATE WITH HCFC-FREE REFRIGERANTS.

1.2 WARRANTY

A. ALL UNITS ARE TO BE SET UP BY A CERTIFIED TECHNICIAN.
B. SPECIAL WARRANTY: MANUFACTURER'S STANDARD FORM IN WHICH MANUFACTURER AGREES TO REPLACE COMPONENTS LISTED BELOW THAT FAIL IN MATERIALS OR WORKMANSHIP WITHIN SPECIFIED WARRANTY PERIOD.

1. WARRANTY PERIOD FOR COMPRESSORS: MANUFACTURER'S STANDARD, BUT NOT LESS THAN FIVE (5) YEARS FROM DATE OF SUBSTANTIAL COMPLETION.
2. WARRANTY PERIOD FOR HEAT EXCHANGERS: MANUFACTURER'S STANDARD, BUT NOT LESS THAN FIVE (5) YEARS FROM DATE OF SUBSTANTIAL COMPLETION.

1.3 MANUFACTURERS

A. MANUFACTURERS: SUBJECT TO COMPLIANCE WITH REQUIREMENTS, PROVIDE PRODUCTS BY ONE OF THE FOLLOWING:
1. AAON
2. TRANE
3. CARRIER
4. YORK
5. GOODMAN

2.1 CABINET

A. CONSTRUCTION: SINGLE WALL.
B. EXTERIOR CASING: GALVANIZED STEEL WITH BAKED-ENAMEL PAINT FINISH WITH LIFTING LUGS AND KNOCKOUTS FOR ELECTRICAL AND PIPING CONNECTIONS.

2.2 INTERIOR CASING - GALVANIZED STEEL

A. BASE RAILS: GALVANIZED-STEEL RAILS FOR MOUNTING ON ROOF CURB.
B. SERVICE DOORS: HINGED ACCESS DOORS WITH NEOPRENE GASKETS.
C. INTERNAL INSULATION: FIBROUS-GLASS DUCT LINING COMPLYING WITH ASTM C 1071, TYPE II.

1. THICKNESS: 1 INCH (25 MM).
2. INSULATION ADHESIVE: COMPLY WITH ASTM C 916, TYPE I.
3. MECHANICAL FASTENERS: GALVANIZED STEEL, SUITABLE FOR ADHESIVE ATTACHMENT, MECHANICAL ATTACHMENT, OR WELDING ATTACHMENT TO CASING WITHOUT DAMAGING LINER AND WITHOUT CAUSING AIR LEAKAGE WHEN APPLIED AS RECOMMENDED BY MANUFACTURER.

D. CONDENSATE DRAIN PANS: FORMED SECTIONS OF STAINLESS-STEEL SHEET DESIGNED FOR SELF-DRAINAGE. FABRICATE PANS WITH SLOPES TO PRECLUDE BUILDUP OF MICROBIAL SLIME. PROVIDE FLOAT SWITCH.
E. ROOF CURB: FULL-PERIMETER CURB OF SHEET METAL, MINIMUM 14 INCHES HIGH, WITH WOOD NAILER, NEOPRENE SEALING STRIP, AND WELDED Z-BAR FLASHING.

2.3 SUPPLY-AIR FAN

A. FAN: FORWARD-CURVED CENTRIFUGAL; STATICALLY AND DYNAMICALLY BALANCED, GALVANIZED STEEL, MOUNTED ON SOLID-STEEL SHAFT WITH SELF-ALIGNING, PERMANENTLY LUBRICATED BALL BEARINGS.
B. MOTOR: TOTALLY ENCLOSED-SPEED MOTOR.
C. DRIVE: V-BELT DRIVE WITH MATCHING FAN PULLEY AND ADJUSTABLE MOTOR SHEAVES AND BELT ASSEMBLY WITH MINIMUM 1.4 SERVICE FACTOR.
D. MOUNTING: FAN WHEEL, MOTOR, AND DRIVES SHALL BE MOUNTED IN FAN CASING WITH SPRING ISOLATORS.

2.4 REFRIGERATION SYSTEM

A. FABRICATE AND LABEL REFRIGERATION SYSTEM TO COMPLY WITH ASHRAE 15, "SAFETY CODE FOR MECHANICAL REFRIGERATION."
B. COMPRESSORS: RECIPROCATING OR SCROLL COMPRESSORS WITH INTEGRAL VIBRATION ISOLATORS, INTERNAL OVERCURRENT AND OVERTEMPERATURE PROTECTION, INTERNAL PRESSURE RELIEF.
C. EER AND COP: 13 EER AND 11.8 COP VALUES AS DEFINED BY ASHRAE/IESNA 90.1, "ENERGY EFFICIENT DESIGN OF NEW BUILDINGS EXCEPT LOW-RISE RESIDENTIAL BUILDINGS."
D. REFRIGERANT: R-410A ON ALL NEW SYSTEMS.
E. REFRIGERATION SYSTEM SPECIALTIES: EXPANSION VALVE WITH REPLACEABLE THERMOSTATIC ELEMENT

1. REFRIGERANT DRYER.
2. HIGH-PRESSURE SWITCH.
3. LOW-PRESSURE SWITCH.
4. THERMOSTAT FOR COIL FREEZE-UP PROTECTION DURING LOW AMBIENT TEMPERATURE OPERATION OR LOSS OF AIR.
5. BRASS SERVICE VALVES INSTALLED IN DISCHARGE AND LIQUID LINES.
6. OPERATING CHARGE OF REFRIGERANT.

2.5 CAPACITY CONTROL

A. HOT-GAS BYPASS REFRIGERANT CONTROL FOR CAPACITY CONTROL WITH CONTINUOUS DEHUMIDIFICATION TO BE PROVIDED.

2.6 REFRIGERANT COILS

A. EVAPORATOR AND CONDENSER COILS SHALL BE DESIGNED, TESTED, FABRICATED, AND RATED ACCORDING TO ARI 410 AND ASHRAE 33. COILS SHALL BE LEAK TESTED UNDER WATER WITH AIR AT 315 PSIG (2170 KPA).

1. CAPACITY REDUCTION: CIRCUIT COILS FOR FACE CONTROL.
2. TUBES: COPPER.
3. FINS: ALUMINUM
4. FIN AND TUBE JOINT: MECHANICAL BOND.
5. SUCTION AND DISTRIBUTOR: SEAMLESS COPPER TUBE WITH BRAZED JOINTS.
6. COATING: PHENOLIC EPOXY CORROSION-PROTECTION COATING ON BOTH COILS.
7. SOURCE QUALITY CONTROL: TEST TO 450 PSIG (3105 KPA), AND TO 300 PSIG (2070 KPA) UNDERWATER.

B. CONDENSER FAN: PROPELLER TYPE, DIRECTLY DRIVEN BY MOTOR.
C. SAFETY CONTROLS:

1. COMPRESSOR MOTOR AND OUTSIDE-COIL FAN MOTOR LOW AMBIENT LOCKOUT.
2. OVERCURRENT PROTECTION FOR COMPRESSOR MOTOR AND OUTSIDE-COIL FAN MOTORS.

2.7 FILTERS

A. COMPLY WITH NFPA 90A.
B. DISPOSABLE PLEATED FILTERS: 2-INCH- (50-MM-) THICK, FACTORY-FABRICATED, FLAT-PANEL-TYPE, DISPOSABLE AIR FILTERS WITH HOLDING FRAMES.
C. FILTER MEDIA TO BE INTERLACED GLASS FIBERS SPRAYED WITH NONFLAMMABLE ADHESIVE.
D. FILTER FRAMES TO BE GALVANIZED STEEL.

2.8 CONTROLS

A. ALL CONTROLS ARE TO BE SET UP BY A CERTIFIED TECHNICIAN.
B. FACTORY-WIRE CONNECTION FOR CONTROLS' POWER SUPPLY.
C. CONTROL DEVICES, INCLUDING SENSORS, TRANSMITTERS, RELAYS, SWITCHES, THERMOSTATS, HUMIDISTATS, DETECTORS, OPERATORS, ACTUATORS, AND VALVES, SHALL BE MANUFACTURER'S STANDARD ITEMS TO ACCOMPLISH INDICATED CONTROL FUNCTIONS.
D. UNIT CONTROLS: SOLID-STATE CONTROL BOARD AND COMPONENTS WITH FIELD-ADJUSTABLE CONTROL PARAMETERS.
E. SUPPLY-FAN CONTROL: UNITS SHALL BE ELECTRICALLY INTERLOCKED WITH CORRESPONDING EXHAUST FANS, TO OPERATE CONTINUOUSLY WHEN EXHAUST FANS ARE RUNNING. TIME CLOCK SHALL SWITCH OPERATION FROM OCCUPIED TO UNOCCUPIED. NIGHT SETBACK THERMOSTAT SHALL CYCLE FAN DURING UNOCCUPIED PERIODS TO MAINTAIN SPACE TEMPERATURE.

1. TIMER: SEVEN-DAY ELECTRONIC CLOCK.

E. ELECTRICALLY INTERLOCK KITCHEN HOOD FIRE-EXTINGUISHING SYSTEM TO DE-ENERGIZE REPLACEMENT-AIR UNIT WHEN FIRE-EXTINGUISHING SYSTEM DISCHARGES.
F. MINIMUM REFRIGERATION SYSTEM CONTROLS SHALL CONSIST OF A WALL-MOUNTING, RELATIVE-HUMIDITY AND TEMPERATURE SENSOR THAT ENERGIZES DEHUMIDIFIER OPERATION WHEN RELATIVE HUMIDITY IS MORE THAN 60 PERCENT.

PIPING:

CONDENSATE DRAINS:

CONDENSATE PIPE TO BE TYPE L OR PVC. ROUTE TO DRYWELL OR AS INDICATED ON PLANS. COORDINATE WITH PLUMBER TO PROVIDE HUB DRAIN(S) IN MECHANICAL ROOM AND DRYWELL(S). HVAC CONTRACTOR TO PROVIDE P-TRAP AT UNIT SIZED FOR 2" GREATER THAN UNIT STATIC PRESSURE. PROVIDE CLEANOUT AT UNIT FOR SUSPENDED HORIZONTAL AIR HANDLERS. INSULATE CONDENSATE PIPE WITH 1/2" ARMAFLEX (OR EQUAL) INSULATION RATED FOR PLENUM APPLICATION. CONDENSATE DRAIN LINE SHALL BE NOT LESS THAN THE EQUIPMENT DRAIN LINE SIZE AND IN NO CASE LESS THAN 3/4" PIPE SIZE.

REFRIGERANT PIPING:

COVER ALL EXPOSED LIQUID LINES AND ALL SUCTION PIPING (INDOORS AND OUTDOORS), FITTINGS, VALVES, ETC., CONTINUOUS THROUGH SLEEVES, HANGERS, ETC., WITH 1/2" FR/ARMAFLEX. INSTALLATION SHALL BE CONDENSATION FREE AND INSTALLED ACCORDING TO MANUFACTURER'S RECOMMENDATIONS.

REFRIGERANT PIPING BELOW GRADE SHALL BE ROUTED THROUGH MINIMUM 4" DIAMETER PVC PIPE SLEEVES TO EACH CONDENSING UNIT. ALL UNDERGROUND REFRIGERANT PIPING SHALL BE CONTINUOUS WITH NO UNDERGROUND JOINTS ALLOWED. REFRIGERANT PIPE SIZES SHALL BE SIZED PER A/C EQUIPMENT MANUFACTURER'S RECOMMENDATION BASED ON LENGTH OF RUN BETWEEN CONDENSING UNITS AND AHU UNITS.

PIPING ROUTED ALONG BUILDING EXTERIOR WALL SHALL BE PROTECTED BY SHEET METAL HOUSING SECURELY ATTACHED TO WALL AT 8'-0" INTERVALS AND PAINTED TO MATCH BUILDING EXTERIOR.

TRAP OIL IN SUCTION LINE AT EVAPORATOR COIL. NO OTHER COIL TRAPS PERMITTED. PROVIDE SUCTION RISERS, CHECK VALVES, SOLENOID VALVES, OR OTHER DEVICES REQUIRED IN PIPING SYSTEM BY MANUFACTURER'S INSTALLATION INSTRUCTIONS.

PIPE HANGERS AND SUPPORTS:
PIPE HANGERS, WHERE NEEDED, SHALL BE GRINNEL #260 CLEVIS TYPE, 5'-0" ON CENTER, SECURELY ATTACHED TO BUILDING CONSTRUCTION. SPACE AT MIN. 5'-0" INTERVALS.

PIPE SUPPORT:
ATTACH LINES SECURELY ALONG PAD/FLOOR/EQUIPMENT/STRUCTURE TO PREVENT MOVEMENT. SUPPORT IN A MANNER THAT LINES DO NOT HANG FROM EVAPORATOR CONNECTIONS OR BLOCK ACCESS TO FILTERS, CONTROLS, ETC.

SUPPORT AT MIN. 8'-0" INTERVALS FOR VERTICAL PIPES, 5'-0" FOR SUSPENDED HORIZONTAL PIPING.

EXHAUST FANS:

FURNISH EXHAUST FANS WITH PERFORMANCE AND CAPACITIES AS LISTED ON THE DESIGN DRAWINGS.

SUSPENDED FANS SHALL BE SUPPORTED FROM A TRAPEZE TYPE HANGER WITH SPRING MOUNTED VIBRATION ISOLATORS.

ALL EXHAUST FANS SHALL COME WITH INTEGRAL BACKDRAFT DAMPER.

COORDINATE WITH ARCHITECT TO LOCATE EXHAUST FANS, EXHAUST GRILLES, WALL OR ROOF CAPS A MINIMUM DISTANCE OF 10'-0" FROM ANY OPERABLE WINDOW, DOOR OR FRESH AIR INTAKE.

AIR DISTRIBUTION EQUIPMENT:

FURNISH SUPPLY AIR GRILLES AND RETURN AIR REGISTERS WITH OPPOSED BLADE BALANCING DAMPERS AS SCHEDULED ON THE DESIGN DRAWINGS.

GRILLES, REGISTERS, AND CEILING DIFFUSERS SHALL BE FURNISHED AS SCHEDULED ON THE DESIGN DRAWINGS AND SHALL BE ALL ALUMINUM CONSTRUCTION UNLESS NOTED OTHERWISE. AIR DISTRIBUTION SHALL NOT EXCEED NC-30 NOISE CRITERIA AS DEFINED IN THE LATEST ASHRAE GUIDE.

DUCTWORK:

1. ALL DUCTWORK DIMENSIONS ARE INSIDE NET FREE AREA.
2. SEAL ALL JOINTS WITH GLASS-FAB AND MASTIC.
3. ALL DUCTWORK SHOWN PER PLAN IS TO BE SHEET METAL. FIBERGLASS DUCT BOARD IS NOT TO BE INSTALLED UNLESS SPECIFICALLY AUTHORIZED BY THE BUILDING LANDLORD, PROJECT OWNER/AGENT AND MECHANICAL ENGINEER OF RECORD.
4. ALL EXHAUST AND OUTSIDE AIR DUCTWORK IS TO BE SHEET METAL - NO EXCEPTIONS. OUTSIDE AIR DUCTWORK IS TO BE EXTERNALLY INSULATED, REFER TO SHEET METAL DUCTWORK INFORMATION BELOW.
ADJUSTABLE SPLITTERS AND DAMPERS SHALL BE SUPPLIED AND INSTALLED IN EVERY SPLIT AND BRANCH DUCT AND SHALL BE PROVIDED WITH LOCKING QUADRANTS ON EXPOSED OR IN ACCESSIBLE AREAS OF THE DUCT FOR EASE OF OPERATION. ACCESS PANELS OR YOUNG REGULATORS SHALL BE PROVIDED WHERE DAMPERS ARE INSTALLED ABOVE HARD CEILINGS OR IN SOFFITS EVEN IF NOT STATED ON PLANS.ELBOWS OR CHANGES IN DUCT DIRECTION GREATER THAN 45 DEGREES SHALL BE FITTED WITH AIR TURNS CONSISTING OF CURVED AIRFOIL BLADES OR VANES WHICH WILL PERMIT THE AIR TO MAKE ABRUPT TURNS WITHOUT APPRECIABLE TURBULENCE.
5. ELBOWS OR CHANGES IN DUCT DIRECTION GREATER THAN 45 DEGREES SHALL BE FITTED WITH AIR TURNS CONSISTING OF CURVED AIRFOIL BLADES OR VANES WHICH WILL PERMIT THE AIR TO MAKE ABRUPT TURNS WITHOUT APPRECIABLE TURBULENCE. LONG RADIUS TURNS ARE AN ACCEPTABLE SUBSTITUTE IF SPACE PERMITS.
6. WHEN DUCT BOARD IS USED: 26 GAUGE Y-FITTINGS WILL NOT BE AN APPROVED SUBSTITUTE FOR TRIANGULAR BOXES.

- SHEET METAL DUCTWORK: SHALL BE CONSTRUCTED PER THE APPROPRIATE SMACNA DESIGN STANDARDS, MEETING THE MINIMUM GAUGE SHEET METAL THICKNESS SPECIFIED. INSULATE INTERNALLY OR EXTERNALLY WITH FIBERGLASS INSULATION TO ACHIEVE A MINIMUM R-VALUE OF 7.0 UNLESS INSTALLED IN A MECHANICALLY COOLED SPACE OR BETWEEN COOLED FLOORS IN A CAVITY WHOSE EXTERIOR WALLS ARE INSULATED, IN WHICH CASE THE R-VALUE MAY BE 4.2.

- FIBERGLASS DUCTWORK: SHALL BE CONSTRUCTED OF FIBERGLASS FIBERBOARD DUCTWORK TO BE A MINIMUM OF 1" THICK. FIBERGLASS DUCTWORK SHALL BE LINED WITH ANTI MICROBIAL INSULATION EQUAL TO JOHNS-MANVILLE SUPERDUCT. INSULATE FIBERGLASS SUPPLY AND RETURN DUCTS TO A MINIMUM R-VALUE OF 6.0 UNLESS INSTALLED IN A MECHANICALLY COOLED SPACE OR BETWEEN COOLED FLOORS IN A CAVITY WHOSE EXTERIOR WALLS ARE INSULATED, IN WHICH CASE THE R-VALUE MAY BE 4.2.

- FLEXIBLE DUCTWORK: SHALL BE SPIRAL FORMED OUT OF 3003 BRIGHT REFLECTIVE FINISHED ALUMINUM ALLOY AND MECHANICALLY LOCKED. FLEXIBLE DUCTS TO A MINIMUM R-VALUE OF 6.0 (R=8 FOR RESIDENTIAL) UNLESS INSTALLED IN A MECHANICALLY COOLED SPACE OR BETWEEN COOLED FLOORS IN A CAVITY WHOSE EXTERIOR WALLS ARE INSULATED, IN WHICH CASE THE R-VALUE MAY BE 4.2 (R=6 FOR RESIDENTIAL). IT SHALL BE UL LISTED UNDER CLASS 1 AIR DUCTS AND CLASS 1 FORM-A ISSUE NO.566,577 FLEXIBLE "AIR DUCT" AND MEET ALL REQUIREMENTS OF UL 181 AND COMPLY WITH NFPA 90A AND NFPA 90B.

- ROUND SPIRAL DUCTWORK: SHALL BE CONSTRUCTED PER THE APPROPRIATE SMACNA DESIGN STANDARDS, MEETING THE MINIMUM GAUGE SHEET METAL THICKNESS SPECIFIED AND SHALL BE A MINIMUM 1" DOUBLE WALL INTERNALLY INSULATED. NON INSULATED SPIRAL DUCTWORK WILL NOT BE ACCEPTED AS A SUBSTITUTION.

VIBRATION ISOLATION:

ALL BLOWER UNITS AND VIBRATING TYPE EQUIPMENT SHALL BE PROPERLY FITTED WITH MASON INDUSTRIES VIBRATION ISOLATION EQUIPMENT SIZED IN ACCORDANCE WITH EQUIPMENT WEIGHT AND DUTY.

PROVIDE FLEXIBLE CONNECTORS AT ALL SUPPLY AND RETURN CONNECTIONS TO AIR HANDLING EQUIPMENT CONSISTING OF HEAVY CANVAS OR NEOPRENE FABRIC WITH AIRTIGHT SEAMS AND CONNECTIONS TO THE EQUIPMENT.

AIR FILTERS:

FILTERS SHALL BE 1" FIBERGLASS MEDIA THROW AWAY TYPE IN A RIGID FRAME WITH A SUPPORTING MAZE ACROSS BOTH ENTERING AND LEAVING SURFACES. SUPPLY ONE COMPLETE SET OF FILTERS AFTER OWNER'S FINAL ACCEPTANCE. FARR 30/30 OR EQUAL.

CONDENSING UNIT INSTALLATION:

PROVIDE CONCRETE PADS FOR GRADE MOUNTED CONDENSING UNITS. PADS SHALL BE A MINIMUM OF 4" THICK, 3,000 PSI CONCRETE, AND SHALL BE 4" LARGER ON EACH SIDE THAN THE FOOTPRINT OF THE CONDENSING UNIT. VERIFY UNIT DIMENSIONS WITH APPROVED SHOP DRAWINGS PRIOR TO FABRICATION OF PADS.

SUSPENDED UNITS SHALL BE SUPPORTED IN APPROVED MANNER AND IN ACCORDANCE WITH AIR HANDLING UNIT SUPPORT DETAIL. PROVIDE AUXILIARY OVERFLOW DRAIN PAN WITH FLOAT SWITCH WHERE REQUIRED.

ALL AIR HANDLING UNITS AND CONDENSING UNITS SHALL BE INSTALLED WITH MANUFACTURER REQUIRED MINIMUM MAINTENANCE CLEARANCES. PROVIDE MAN SIZED ACCESS PANEL WHERE REQUIRED.

FIRE / SMOKE/ RADIATION DAMPERS:

FIRE DAMPERS SHALL BE TYPE "B" CURTAIN TYPE, SUITABLE FOR EITHER VERTICAL OR HORIZONTAL INSTALLATION WITH 20 GAUGE STEEL CHANNEL FRAMES, 24 GAUGE STEEL BLADES, AND 18 GAUGE STEEL ENCLOSURE WITH DUCT COLLARS. ALL PARTS GALVANIZED MILL FINISH.

FIRE DAMPERS SHALL BE EQUAL TO RUSKIN TYPE 1BD2 FOR WALLS UP TO 2 HOUR.

INSTALL IN ACCORDANCE WITH NFPA-90A, TESTED IN ACCORDANCE WITH UL SAFETY STANDARD 555, 1-1/2 HOUR AND 4 HOUR PROTECTION, AND 165°F FUSIBLE LINK.

MEMBRANE PENETRATIONS = RADIATION OR FIRE DAMPERS SHALL BE INSTALLED ON ANY DUCTWORK 6" IN DIAMETER OR LARGER PENETRATING A RATED CEILING MEMBRANE.

NOTE

ALL OF THE SPECIFICATIONS LISTED ON THIS SHEET MAY NOT BE USED FOR THIS PROJECT.

THE FALLS AT DRAKE POINT
LAKE COUNTY, FLORIDA

SHEET NAME:

SPECIFICATIONS
MECHANICAL

SHEET NUMBER:

M6.01

© Copyright 2021 ACI, Inc.